US Department of Transportation

Federal Aviation Administration

Java Messaging Service Description Document (JMSDD)

System Wide Information Management (SWIM)
Flight Data Publication Service (SFDPS)

NAS-JMSDD-4309-001

Version 2.6
April 07, 2016

Prepared for
Federal Aviation Administration
System Wide Information Management Program Office
Enterprise Programs
800 Independence Avenue, SW
Washington, DC 20591

Prepared by
Volpe National Transportation Systems Center
Air Traffic Management Systems Division
55 Broadway
Cambridge, MA 02142

Java Messaging Service Description Document

SWIM Flight Data Publication Service

Approval Signatures

Name	Organization	Signature	Date Signed
Melissa Matthews	AJM-316		

DRAFT

Java Messaging Service Description Document

SWIM Flight Data Publication Service

Revision Record

Revision Letter	Description	Revision Date	Entered by
1.0	Initial draft	July 10, 2014	Volpe Center
1.1	Initial version with edits	August 8, 2014	Volpe Center
1.2	Added new message types Modified security section 4.1. Added AIXM schema for airspace messages. Minor edits.	November 12, 2014	Volpe Center
2.0	Updated version numbers of FIXM, SimpleXML, and of SFDPS software. Changed version number of document to 2.0. Completed sections for reconstitution messages.	February 13, 2015	Volpe Center
2.1	Included a paragraph describing how SFDPS obtains and uses data files to determine whether a flight is military/sensitive.	March 24, 2015	Volpe Center
2.2	Filled In Service Category Information; Added information on FDPS_sourceSystem property	June 19, 2015	Volpe Center/Noblis/Engility
2.3	Minor edits (added 'potential', removed 'binary encoded' data, updated references)	July 01, 2015	Noblis/Engility
2.4	Updated frequency information	October 7, 2015	Noblis/Engility

DRAFT

2.5	Added “coordFix_06a” to the data elements table of the HP message. Deleted “externalBeaconCode_04b”, “coordFix_06a”, “coordStatusTime_07d”, “coordStatus_07d1”, “coordTime_07d2” and “delayTime_07e” from data elements table of the NP message. Updated message frequency estimates based on data received on August 10th 2015. Updated message frequency estimates based on data received on August 10th 2015. Added tables for FIXM formatted messages. Added description of BATCH_TH and BATCH_TH_FIXM messages.	January 29, 2016	Volpe Center
2.6	Formatting Changes Modified ERFDP table in 5.5 to remove TH.	April 07, 2016	Noblis/Engility

DRAFT

Table of Contents

1. Scope 1

1.1 Background 1

2. Applicable Documents 3

2.1 Government Documents 3

2.2 Non-Government Documents and Other Publications 4

2.3 Security Policies 4

3. Definitions 5

3.1 Terms and Definitions 5

3.2 Acronyms 7

4. Service Profile 10

4.1 Service Provider 12

4.1.1 Point of Contact 12

4.2 Service Consumers 12

4.3 Service Functionality 13

4.4 Security 13

4.4.1 Roles 14

4.4.2 Access Control Mechanisms 14

4.5 Quality of Services (QoS) 14

4.6 Service Policies 14

4.7 Environmental Constraints 14

5. Service Interfaces 15

5.1 Interface 15

5.2 Operations 15

5.2.1 Processing Considerations 15

5.3 Messages 16

5.3.1 Flight Data Publication Service Messages 19

5.3.1.1 Flight Plan Information: FH 19

5.3.1.2 Flight Amendment Information: AH 20

5.3.1.3 Converted Route Information: HX 20

5.3.1.4 Cancellation Information: CL 21

5.3.1.5 Departure Information: DH 21

5.3.1.6 Aircraft Identification Amendment Information: IH 22

5.3.1.7 Hold Information: HH 23

5.3.1.8 Progress Report Information: PH 23

5.3.1.9 Flight Arrival Information: HV 24

5.3.1.10 Flight Plan Update Information: HU 24

5.3.1.11 Expected Departure Time Information: ET 25

5.3.1.12 Position Update Information: HP 26

DRAFT

5.3.1.13 Tentative Flight Plan Information: NP 26
5.3.1.14 Tentative Aircraft Identification Amendment Information: NI 27
5.3.1.15 Tentative Flight Plan Removal: NL 28
5.3.1.16 Tentative Flight Plan Amendment Information: NU 28
5.3.1.17 Batch Track Information: BATCH_TH 29
5.3.1.18 Drop Track Information: RH 29
5.3.1.19 Interim Altitude Information: LH 30
5.3.1.20 ARTS Flow Control Track/Full Data Block Information: HZ 31
5.3.1.21 Beacon Code Reassignment: BA 31
5.3.1.22 Beacon Code Restricted: RE 32
5.3.1.23 FDB Fourth Line Information: HF 32
5.3.1.24 Point Out Information: HT 33
5.3.1.25 Inbound Point Out Information: PT 34
5.3.1.26 Handoff Status: OH 34
5.3.1.27 Flight Plan Reconstitution: DBRTFPI 35
5.3.1.28 Flight Data Properties 36
5.3.2 Airspace Data Publication Service Messages 39
5.3.2.1 Sector Assignment Status: SH 39
5.3.2.2 Route Status: HR 41
5.3.2.3 Special Activities Airspace (SAA): SU 41
5.3.2.4 Altimeter Setting: HA 42
5.3.2.5 Adapted Route Status Reconstitution: DBRTRI 43
5.3.2.6 Altimeter Status Reconstitution: DBRTAI 43
5.3.2.7 Sector Assignment Reconstitution: DBRTSI 44
5.3.2.8 Airspace Data Properties 44
5.3.3 Operational Data Publication Service Messages 46
5.3.3.1 Traffic Count Adjustment: AK 46
5.3.3.2 Instrument Approach Count Adjustment: AC 47
5.3.3.3 Sign In Sign Out: SY 48
5.3.3.4 Beacon Code Utilization: UB 48
5.3.3.5 Geographic Beacon Code Utilization: UG 49
5.3.3.6 Operational Data Properties 49
5.3.4 General Information Publication Service Message 50
5.3.4.1 General Information: GH 50
5.3.4.2 Interim Altitude Status Information: HE 51
5.3.4.3 Hold Status Information: HO 51
5.3.4.4 ERAM Status Information: HS 52
5.3.4.5 Unsuccessful Transmission Information: UI 52
5.3.4.6 General Information Data Properties 53

5.4 Exceptions Handling 54

5.5 Data 56

5.5.1 Flight Data Publication Service Data Elements and Diagrams 60
5.5.1.1 ERFDP Service: targetNamespace 61
5.5.1.2 SimpleXML Flight Plan, Flight Amendment, and Flight Update [FH, AH and HU] - Data Elements 61
5.5.1.3 Flight Plan, Flight Amendment, and Flight Update [FH, AH and HU]: Diagram 92
5.5.1.4 FIXM Flight Plan, Flight Amendment, and Flight Update [FH_FIXM, AH_FIXM and HU_FIXM] - Data Elements 97
5.5.1.5 Flight Amendment Information [AH] – Data Elements 135
5.5.1.6 Flight Amendment Information [AH] – Diagram 135

DRAFT

5.5.1.7 Flight Amendment Information in FIXM Format [AH_FIXM] – Data Elements 135
5.5.1.8 Converted Route Information [HX] - Data Elements 135
5.5.1.9 Converted Route Information [HX]- Diagram 138
5.5.1.10 Converted Route Information FIXM format (HX_FIXM) – Data Elements. 139
5.5.1.11 Cancellation Information [CL] - Data Elements 143
5.5.1.12 Cancellation Information [CL] – Diagram 145
5.5.1.13 Cancellation Information in FIXM Format [CL_FIXM] – Data Elements.... 145
5.5.1.14 Departure Information [DH] - Data Elements 147
5.5.1.15 Departure Information [DH] - Diagram 151
5.5.1.16 Departure Information Message in FIXM Format [DH_FIXM] – Data Elements 152
5.5.1.17 Aircraft Identification Amendment Information [IH] - Data Elements 158
5.5.1.18 Aircraft Identification Amendment Information [IH] - Diagram..... 160
5.5.1.19 Flight Identification Amendment Information Message in FIXM Format [IH_FIXM] – Data Elements..... 160
5.5.1.20 Hold Information [HH] – Data Elements 164
5.5.1.21 Hold Information [HH] - Diagram 166
5.5.1.22 Hold Information Message in FIXM Format [HH_FIXM] – Data Elements. 166
5.5.1.23 Progress Report Information [PH] – Data Elements 171
5.5.1.24 Progress Report Information [PH] - Diagram 172
5.5.1.25 Progress Report Information Message in FIXM Format [PH_FIXM] – Data Elements 172
5.5.1.26 Flight Arrival Information [HV] – Data Elements 176
5.5.1.27 Flight Arrival Information [HV] - Diagram 179
5.5.1.28 Flight Arrival Information Message in FIXM Format [HV_FIXM] – Data Elements 179
5.5.1.29 Flight Plan Update Information [HU] – Data Elements..... 182
5.5.1.30 Flight Plan Update Information [HU] - Diagram..... 183
5.5.1.31 Flight Plan Update Information Message in FIXM Format [HU_FIXM] – Data Elements 183
5.5.1.32 Expected Departure Time Information [ET] – Data Elements 183
5.5.1.33 Expected Departure Time Information [ET] - Diagram 185
5.5.1.34 Expected Departure Time Information Message in FIXM Format [ET_FIXM] – Data Elements 185
5.5.1.35 Position Update Information [HP] – Data Elements..... 189
5.5.1.36 Position Update Information [HP] - Diagram..... 192
5.5.1.37 Position Update Information Message in FIXM Format [HP_FIXM] – Data Elements 192
5.5.1.38 Tentative Flight Plan Information [NP] – Data Elements 197
5.5.1.39 Tentative Flight Plan Information [NP] - Diagram 205
5.5.1.40 Tentative Flight Plan Information in FIXM Format [NP_FIXM] – Data Elements 206
5.5.1.41 Tentative Aircraft Identification Amendment Information [NI] – Data Elements 214
5.5.1.42 Tentative Aircraft Identification Amendment Information [NI] - Diagram 217
5.5.1.43 Tentative Aircraft Identification Amendment Information Message in FIXM Format [NI_FIXM] – Data Elements..... 217
5.5.1.44 Tentative Flight Plan Removal [NL] – Data Elements 221
5.5.1.45 Tentative Flight Plan Removal [NL] - Diagram 224
5.5.1.46 Tentative Flight Plan Removal Message in FIXM Format [NL_FIXM] 224
5.5.1.47 Tentative Flight Plan Amendment Information [NU] – Data Elements..... 230
5.5.1.48 Tentative Flight Plan Amendment Information [NU] - Diagram..... 238

DRAFT

5.5.1.49 Tentative Flight Plan Amendment Information Message in FIXM Format [NU_FIXM] – Data Elements 239
5.5.1.50 Batch Track Information [BATCH_TH] – Data Elements 250
5.5.1.51 Batch Track Information [BATCH_TH] - Diagram 261
5.5.1.52 Batch Track Information Message in FIXM Format [BATCH_TH_FIXM] – Data Elements 262
5.5.1.53 Drop Track Information [RH] – Data Elements 272
5.5.1.54 Drop Track Information [RH] - Diagram 274
5.5.1.55 Drop Track Information Message in FIXM Format [RH_FIXM] – Data Elements 274
5.5.1.56 Interim Altitude Information [LH] – Data Elements 277
5.5.1.57 Interim Altitude Information [LH] - Diagram 279
5.5.1.58 Interim Altitude Information Message in FIXM Format [LH_FIXM] – Data Elements 279
5.5.1.59 ARTS Flow Control Track/Full Data Block Information [HZ] – Data Elements 283
5.5.1.60 ARTS Flow Control Track/Full Data Block Information [HZ] - Diagram 287
5.5.1.61 ARTS Flow Control Track/Full Data Block Information [HZ_FIXM] – Data Elements 287
5.5.1.62 Beacon Code Reassignment [BA] – Data Elements 294
5.5.1.63 Beacon Code Reassignment [BA] - Diagram 296
5.5.1.64 Beacon Code Reassignment Message in FIXM Format [BA_FIXM] – Data Elements 296
5.5.1.65 Beacon Code Restricted [RE] – Data Elements 300
5.5.1.66 Beacon Code Restricted [RE] - Diagram 303
5.5.1.67 Beacon Code Restricted Message in FIXM Format [RE_FIXM] – Data Elements 303
5.5.1.68 FDB Fourth Line Information [HF] – Data Elements 307
5.5.1.69 FDB Fourth Line Information [HF] - Diagram 309
5.5.1.70 FDB Forth Line Message in FIXM Format [HF_FIXM] – Data Elements 309
5.5.1.71 Point Out Information [HT] – Data Elements 313
5.5.1.72 Point Out Information [HT] - Diagram 314
5.5.1.73 Point Out Information Message in FIXM Format [HT_FIXM] – Data Elements 314
5.5.1.74 Inbound Point Out Information [PT] – Data Elements 318
5.5.1.75 Inbound Point Out Information [PT] - Diagram 320
5.5.1.76 Inbound Point Out Information Message in FIXM [PT_FIXM] – Data Elements 320
5.5.1.77 Handoff Status [OH] – Data Elements 325
5.5.1.78 Handoff Status [OH] – Diagram 328
5.5.1.79 Handoff Status Message in FIXM Format [OH_FIXM] – Data Elements.... 328
5.5.1.80 Flight Plan Reconstitution [DBRTFPI] – Data Elements 333
5.5.1.81 Flight Plan Reconstitution [DBRTFPI] – Diagram 363
5.5.1.82 Flight Plan Reconstitution Message in FIXM Format [DBRTFPI_FIXM] – Data Elements 365
5.5.2 Airspace Data Publication Service Data Elements and Diagrams 405
5.5.2.1 ERADP Service: targetNamespace 405
5.5.2.2 Sector Assignment Status [SH] – Data Elements 405
5.5.2.3 Sector Assignment Status [SH] - Diagram 408
5.5.2.4 Sector Assignment Status Message in AIXM Format [SH_AIXM] – Data Elements 408
5.5.2.5 Route Status [HR] – Data Elements 409
5.5.2.6 Route Status [HR] - Diagram 411

5.5.2.7 Route Status Message in AIXM Format [HR_AIXM] – Data Elements 411
5.5.2.8 Route Status Message in FIXM Format [HR_AIXM] – Diagram 412
5.5.2.9 Special Activities Airspace (SAA) [SU] – Data Elements 413
5.5.2.10 Special Activities Airspace (SAA) [SU] – Diagram 415
5.5.2.11 Special Activities Airspace (SAA) in AIXM Format [SU_AIXM] – Data Elements 415
5.5.2.12 Altimeter Setting [HA] – Data Elements 418
5.5.2.13 Altimeter Setting [HA] – Diagram 420
5.5.2.14 Adapted Route Status Reconstitution [DBRTRI] – Data Elements 420
5.5.2.15 Adapted Route Status Reconstitution [DBRTRI] – Diagram 421
5.5.2.16 Adapted Route Status Reconstitution Message in AIXM Format [DBRTRI_AIXM] – Data Elements 421
5.5.2.17 Altimeter Status Reconstitution [DBRTAI] – Data Elements 422
5.5.2.18 Altimeter Status Reconstitution [DBRTAI] – Diagram 424
5.5.2.19 Sector Assignment Reconstitution [DBRTSI] – Data Elements 424
5.5.2.20 Sector Assignment Reconstitution [DBRTSI] – Diagram 426
5.5.2.21 Sector Assignment Reconstitution Message in AIXM Format [DBRTSI_AIXM] – Data Elements 426
5.5.3 Operational Data Publication Service Data Elements and Diagrams 428
5.5.3.1 ERODP Service: targetNamespace 428
5.5.3.2 Traffic Count Adjustment [AK] – Data Elements 428
5.5.3.3 Traffic Count Adjustment [AK] - Diagram 431
5.5.3.4 Instrument Approach Count Adjustment [AC] – Data Elements 431
5.5.3.5 Instrument Approach Count Adjustment [AC] - Diagram 435
5.5.3.6 Sign In Sign Out [SY] – Data Elements 435
5.5.3.7 Sign In Sign Out [SY] - Diagram 440
5.5.3.8 Beacon code Utilization [UB] – Data Elements 441
5.5.3.9 Beacon code Utilization [UB] - Diagram 442
5.5.3.10 Geographic Beacon Code Utilization [UG] – Data Elements 443
5.5.3.11 Geographic Beacon Code Utilization [UG] - Diagram 444
5.5.4 General Information Publication Service Data Elements and Diagram 445
5.5.4.1 ERGMP Service: targetNamespace 445
5.5.4.2 General Information [GH] – Data Elements 445
5.5.4.3 General Information [GH] - Diagram 446
5.5.4.4 Interim Altitude Status Information [HE] – Data Elements 446
5.5.4.5 Interim Altitude Status Information [HE] – Diagram 448
5.5.4.6 Hold Status Information [HO] – Data elements 448
5.5.4.7 Hold Status Information [HO] – Diagram 450
5.5.4.8 ERAM Status Information [HS] – Data Elements 450
5.5.4.9 ERAM Status Information [HS] – Diagram 453
5.5.4.10 Unsuccessful Transmission Information [UI] – Data Elements 453
5.5.4.11 Unsuccessful Transmission Informattion [UI] - Diagram 455

6. Service Implementation 456

6.1 Bindings 456
6.1.1 ActiveMQ 456
6.1.1.1 Data format 456
6.1.1.2 Message protocol 456
6.1.1.3 Transport protocol 456

6.2 End Points 456
6.2.1 End Point 1 456

DRAFT

1. Scope

This Java Messaging Service Description Document (JMSDD) describes the Java messaging services for the System-Wide Information Management (SWIM) Flight Data Publication Service (SFDPS). These Service Oriented Architecture (SOA) services are available to Federal Aviation Administration (FAA) users and non-FAA users as National Airspace System (NAS) services. This document was prepared in accordance with the FAA Standard Practice Preparation of Java Messaging Service Description Documents [FAA-STD-073 (Reference 13)].

SFDPS publishes four different categories of data, defined as four En Route Data Services. The four services are:

- En Route Flight Data Publication (ERFDP) – Includes any data specific to an individual flight.
- En Route Airspace Data Publication (ERADP) – Includes airspace data that is of general interest.
- En Route Operational Data Publication (ERODP) – Includes data sent by En Route Automation Modernization (ERAM) to support specific FAA monitoring functions.
- En Route General Message Publication (ERGMP) – The ability to send general, free-form text messages and other messages to one or more clients or classes of clients.

The description is divided into three core sections: Service Profile, Service Interfaces, and Service Implementation.

- The Service Profile section answers the question "What does the service do?" It does this in a manner that allows a service consumer to determine whether a particular service meets its needs.
- The Service Interfaces section answers the question "How does the service work?" It describes the interface and semantics of the service; that is, it details the content of requests, message formats, data types, and transport formats.
- The Service Implementation section answers the question "How does one access the service?" It specifies the communication protocol and network address.

1.1 Background

This JMSDD applies to the current version (1.3.0) of Phase 1 of the SFDPS. SFDPS is the SWIM program developed to provide flight information services to a wide variety of consumers in a manner that complies with SWIM standards and requirements. The general purpose of Phase 1 is to make ERAM system data easily accessible to consumers. Phase 1 provides only a one-way data distribution; two-way communications between other systems and ERAM are deferred to the future.

SFDPS data consumers could be FAA facilities, FAA systems or programs, other government systems or programs, or non-government systems or programs. This data is derived completely from the Host Air Traffic Management (ATM) Data Distribution System (HADDS) Common Message Set (CMS) messages. The general behavior is that an incoming CMS message from HADDS triggers a data publication from SFDPS.

SFDPS publishes messages to the National Airspace (NAS) Enterprise Messaging Service (NEMS), which then delivers those messages to subscribers.

This document only deals with SFDPS JMS publication services. Request-Response web services are described in the Web Service Description Document (WSDD) (See Reference 6).

DRAFT

2. Applicable Documents

2.1 Government Documents

1. Ken Howard, *FDPS Architecture Description*, Volpe National Transportation System Center, Cambridge, MA, report no. VNTSC-TFM-12-6, March 2012
2. *System/Subsystem Specification (SSS) Document for the En Route Flight Data Publication Service, Draft*, Volpe National Transportation System Center, Cambridge, MA, Version 2.0, January 9, 2015
3. *Host Air Traffic Management (ATM) Data Distribution System (HADDS) Application Programming Interface (API) Document, Revision 1 For Common Message Set (CMS)*, May 2008
4. *System/Subsystem Design Description (SSDD) For the En Route Flight Data Publication Service, Draft*, Volpe National Transportation System Center, Cambridge, MA, Version 0.37, September 1, 2014
5. *Development Test (DT) Test Plan For the En Route Flight Data Publication Service (FDPS)* Version 1.10, Volpe National Transportation System Center, Cambridge, MA, October 19, 2012
6. *FPDS Software Design Description Document (SDD), Draft*, Version 1.2, Volpe National Transportation System Center, Cambridge, MA, September 1, 2014
7. *Web Service Requirements Document (WSRD) System Wide Information Management (SWIM) Flight Data Publication Service (SFDPS)*, Version 2.2, Volpe National Transportation System Center, Cambridge, MA, July 01, 2015
8. *Web Service Description Document (WSDD) System Wide Information Management (SWIM) Flight Data Publication Service (SFDPS)*, Version 2.3, Volpe National Transportation System Center, Cambridge, MA, July 01, 2015
9. FAA–STD–063, *XML Namespaces,* May 1, 2009 http://www.tc.faa.gov/its/worldpac/standards/faa-std-063.pdf
10. FAA–STD–064, *Web Service Registration*, May 1, 2009 http://www.tc.faa.gov/its/worldpac/standards/faa-std-064.pdf
11. FAA–STD–065, *Standard Practice Preparation of Web Service Description Documents*, February 26, 2010 http://www.tc.faa.gov/its/worldpac/standards/faa-std-065.pdf
12. FAA–STD–066, *Web Service Taxonomies*, February 26,2010 http://www.tc.faa.gov/its/worldpac/standards/faa-std-066.pdf
13. FAA-STD-073, Preparation of Java Messaging Service Description Documents, January 29,2014 http://www.tc.faa.gov/its/worldpac/standards/faa-std-073.pdf
14. *NAS Enterprise Messaging Service (NEMS) Asynchronous Messaging ICD*, *Draft,* Federal Aviation Administration, System Wide Information Management Program, July 20, 2012
15. SFDPS_v1.3.7.xsd, Volpe National Transportation System Center, Cambridge, MA, February 2, 2016

DRAFT

16. SS to FIXM 3.0 Mapping v6, Volpe National Transportation System Center, Cambridge, MA, January 22, 2016
17. FIXM Core v3.0 and FIXM US Extension v3.0 Schema Files, http://www.fixm.aero
18. AIXM 5.1 and AIXM SFDPS Extension Schema Files, http://www.aixm.aero
19. ATS Message Content to FIXM Logical Model Map_v2_0.pdf, http://www.fixm.aero
20. SWIM Flight Data Consumer Reference Manual, Volpe National Transportation System Center, Cambridge, MA, Version 2.1.1, March 10, 2016.

2.2 Non-Government Documents and Other Publications

21. World Wide Web Consortium (W3C) XML Schema http://www.w3.org/XML/Schema
22. W3C Recommendation, "XML-Signature Syntax and Processing", 12 February 2002. http://www.w3.org/TR/2002/REC-xmldsig-core-20020212/
23. W3C Recommendation, D. Eastlake et al. XML Signature Syntax and Processing
24. Java 2 Platform, Enterprise Edition, v 1.3 API Specification http://docs.oracle.com/javaee/1.3/api/
25. XML Signature Syntax and Processing (Second Edition). 10 June 2008. http://www.w3.org/TR/2008/REC-xmldsig-core-20080610/
26. Organization for the Advancement Structured of Information Standards (OASIS) SOA Reference Model. http://docs.oasis-open.org/soa-rm/v1.0/soa-rm.pdf

2.3 Security Policies

27. FAA Order 1370.103, Encryption Policy, dated 11/12/08
28. FAA Order 1370.104, Digital Signature Policy dated 10/31/2008
29. FAA Order 1370.112, FAA Application Security Policy dated 10/5/2010
30. FAA Order 1370.92A, Password and PIN Management Policy dated 8/6/2010
31. FAA Order 1370.95, Wide Area Network Connectivity Security dated 9/12/2006
32. FAA Protecting Personally Identifiable Information Order 1280.1B, 12/17/08
33. FAA Order 1370.113 Web Security Management Policy 5/16/12

DRAFT

3. Definitions

Many of the terms listed in this section are defined in FAA-STD-073, Preparation of Java Messaging Service Description Documents (see Reference 13).

3.1 Terms and Definitions

Asynchronous An interaction in which the associated messages are chronologically and procedurally decoupled. For example, in a request-response interaction, the client agent can process the response at some indeterminate point in the future when its existence is discovered.

Authentication The process of verifying an identity claimed by or for a system entity.

Authorization The granting of rights or permission to a system entity (mainly but not always a user or a group of users) to access a service.

Binding An association between an interface, a concrete protocol, and a data format. A binding specifies the protocol and data format to be used in transmitting messages defined by the associated interface.

Client A client is an external entity that interacts with a service. A client makes a request of a service and receives a response from the service. The client may also request a subscription and receive messages when a service publishes information. A client may be a software system, software application, or another service. A client may be a NAS client or a non-NAS client.

Data Element A unit of data for which the definition, identification, representation, and permissible values are specified by means of a set of attributes.

Datatype A set of distinct values, characterized by properties of those values, and by operations on those values.

Effect A state or condition that results from interaction with a service. Multiple states may result depending on the extent to which the interaction completes successfully or generates a fault.

End Point An association between a fully specified binding and a physical point (i.e., a network address) at which a service may be accessed.

Fault A message that is returned as a result of an error that prevents a service from implementing a required function. A fault usually contains information about the cause of the error.

Format The arrangement of bits or characters within a group, such as a data element, message, or language.

Input Data entered into, or the process of entering data into, an information processing system or any of its parts for storage or processing.

Java Message Service (JMS)
A Java-based application programming interface (API) that

provides a common way for Java programs to create, send, receive, and read an enterprise messaging system's messages.

JMS Client An application or process that produces and/or receives messages.

Message A basic unit of communication from one software agent to another sent in a single logical transmission.

Message Producer A JMS client that creates and sends messages.

Namespace A collection of names, identified by a Uniform Resource Identifier (URI) reference, that are used in Extensible Markup Language (XML) documents as element types and attribute names. The use of XML namespaces to identify uniquely metadata terms allows those terms to be used unambiguously across applications, promoting the possibility of shared semantics.

NAS Enterprise Messaging Service (NEMS)
A NAS-based implementation of message-oriented middleware (MOM) that is responsible for distributing messages among information consumers and providers, as well as providing administrative functionality that includes (but is not limited to) fault tolerance, load balancing, mediation and orchestration support.

Operation A set of messages related to a single service action.

Organization A unique framework of authority within which a person or persons act, or are designated to act, towards some purpose. Any department, service, or other entity within an organization which needs to be identified for information exchange.

Output Data transferred out of, or the process by which an information processing system or any of its parts transfers data out of, that system or part.

Permissible Values The set of allowable instances of a data element.

Protocol A formal set of conventions governing the format and control of interaction among communicating functional units.

Quality of Service (QoS)
A parameter that specifies and measures the value of a provided service.

Security The protection of information and data so that unauthorized persons or systems cannot read or modify them and authorized persons or systems are not denied access to them.

Service A mechanism to enable access to one or more capabilities, where the access is provided using a prescribed interface and is exercised consistent with constraints and policies as specified by the service description.

Service Consumer An organization that seeks to satisfy a particular need through the use of capabilities offered by means of a service.

Service Description The information needed in order to use, or consider using, a service.

DRAFT

Service Interface The means by which the underlying capabilities of a service are accessed.

Service Provider An organization that offers the use of capabilities by means of a service.

Subscription For Phase 1 of SFDPS, the term "subscription" used in this document or in the service names/artifacts, is a connection for published data by an SFDPS consumer. Consumers can request specific data sets by specifying values during on-ramping to NEMS.

Topic A distribution mechanism for publishing messages that are delivered to multiple subscribers.

Uniform Resource Identifier (URI)
A compact string of characters for identifying an abstract or physical resource.

User A human, his/her agent, a surrogate, or an entity that interacts with information processing systems. A person, organization entity, or automated process that accesses a system, whether authorized to do so or not.

Web Service A platform-independent, loosely coupled software component designed to support interoperable machine-to-machine interaction over a network. It has an interface described in a machine-processable format. XML formatted messages are exchanged over the Internet using standard transport and Web-based protocols.

3.2 Acronyms

ADS/ADS-B	Automated Dependent Surveillance (-Broadcast)
AIXM	Airspace Information Exchange Model
API	Application Programming Interface
ARTCC	Air Route Traffic Control Center
ARTS	Automated Radar Terminal System
ATM	Air Traffic Management
ATS	Air Traffic Service
BARR	Block Aircraft Registration Request
CMS	Common Message Set
CTAS	Center-TRACON Automation System
DME	Distance Measuring Equipment
EDCT	Estimated Departure Clearance Time
EET	Estimated Elapsed Time
ERADP	En Route Airspace Data Publication
ERAM	En Route Automation Modernization
ERFDP	En Route Flight Data Publication

DRAFT

ERGMP	En Route General Message Publication
ERODP	En Route Operational Data Publication
FDB	Full Data Block
FDPS	Flight Data Publication Service
FIR	Flight Information Region
FIXM	Flight Information Exchange Model
FMS	Flight Management System
GNSS	Global Navigation Satellite System
GPS	Global Positioning System
GUFI	Globally Unique Flight Identifier
HADDS	Host ATM Data Distribution System
ICAO	International Civil Aviation Organization
ICD	Interface Control Document
IFPA	Instrument Flight Procedure Automation
IFR	Instrument Flight Rules
IPOP	Intermediate Point of Presence
IRU	Inertial Reference Unit
JMS	Java Message Service
JMSDD	Java Messaging Service Description Document
LOCID	Location Identifier
MOM	Message-Oriented Middleware
NAS	National Airspace System
NEMS	NAS Enterprise Messaging System
PBN	Performance-Based Navigation
QoS	Quality of Service
RIF	Revised In Flight
RNAV	Area Navigation
RNP	Required Navigation Performance
RVSM	Reduced Vertical Separation Minimums
SAA	Special Activities Airspace
SOA	Service Oriented Architecture
SSDD	System/Subsystem Design Document
SSR	Secondary Surveillance Radar
SSS	System/Subsystem Specification
STARS	Standard Terminal Automation Replacement System
SFDPS	SWIM Flight Data Publication Service

DRAFT

SWIM	System Wide Information Management
TCP	Transmission Control Protocol
TFDM	Terminal Flight Data Manager
TFMS	Traffic Flow Management System
TRACON	Terminal Radar Approach Control Facility
UFPI	Unique Flight Plan Identifier, same as the ERAM-GUFI.
URI	Uniform Resource Identifier
VFR	Visual Flight Rules
VHF	Very High Frequency
VOR	VHF Omni-directional Radar
W3C	World Wide Web Consortium
WAAS	Wide-Area Augmenation System
WMSCR	Weather Message Switching Center Replacement
WSDD	Web Service Description Document
XML	Extensible Markup Language

DRAFT

4. Service Profile

The SWIM Flight Data Publication Service makes CMS messages sent from ERAM available through one of four publication services depending on the type of the message. The messages supported by each service are defined in the schema document, SFDPS_v1.2.xsd (see reference 15).

1. En Route Flight Data Publication Service

Name	EnrouteFlightDataPublication
Namespace	us:gov:dot:faa:atm:enroute:services:flightdatapub
Description	This Java Messaging Service accepts subscriptions for flight and track data. It allows users to specify a range of selection criteria defined in Section 5.5.1. Flight messages meeting these criteria are routed to the consumer by NEMS.
Version	1.3.0
Service Category	Flight Information Service
Lifecycle Stage	Production
Criticality Level	Essential

2. En Route Airspace Data Publication Service

Name	EnrouteAirspaceDataPublication
Namespace	us:gov:dot:faa:atm:enroute:services:airspacedatapub
Description	This Java Messaging Service accepts subscriptions for sector and route data. It allows users to specify a range of selection criteria defined in Section 5.5.2. Airspace messages meeting these criteria are routed to the consumer by NEMS.
Version	1.3.0
Service Category	Navigation Information Service
Lifecycle Stage	Production
Criticality Level	Essential

DRAFT

3. En Route Operational Data Publication Service

Name	EnrouteOperationalDataPublication
Namespace	us:gov:dot:faa:atm:enroute:services:operationaldatapub
Description	This Java Messaging Service accepts subscriptions for operational message data. It allows users to specify a range of selection criteria defined in Section 5.5.3. Operational messages meeting these criteria are routed to the consumer by NEMS.
Version	1.3.0
Service Category	Air Traffic Support Service
Lifecycle Stage	Production
Criticality Level	Essential

4. En Route General Message Publication Service

Name	EnrouteGeneralMessagePublication
Namespace	us:gov:dot:faa:atm:enroute:services:generalmessagepub
Description	This Java Messaging Service accepts subscriptions for general message publication data. It allows users to specify a range of selection criteria defined in Section 5.5.4. General messages meeting these criteria are routed to the consumer by NEMS.
Version	1.3.0
Service Category	Air Traffic Support Service
Lifecycle Stage	Production
Criticality Level	Essential

DRAFT

4.1 Service Provider

Name	Federal Aviation Administration (FAA) System Wide Information Management (SWIM) Program Office, Enterprise Programs
Description	A program within the FAA Air Traffic Organization that is responsible for transforming technologies that provide more efficient operations and streamlined data communications capabilities.
Web page	http://www.faa.gov/nextgen/swim/

4.1.1 Point of Contact

Name	Chris Pressler
Organization	Federal Aviation Administration
Title	SWIM Program SFDPS Team Leader
Phone	703-201-3680
email	Chris.Pressler@faa.gov

4.2 Service Consumers

Potential consumers of SFDPS data and services include the following:

- **Traffic Flow Management System (TFMS)** – TFMS monitors all planned and current flights. It would subscribe for all flight plan data, position updates, and other flight data messages. It also needs current sector configurations and route status messages. It is a trusted FAA system, and would therefore get all messages.
- **Terminal Radar Approach Control Facility (TRACON)/Tower** – An FAA system such as the Standard Terminal Automation Replacement System (STARS) or the Terminal Flight Data Manager (TFDM) could subscribe to a subset of the en route data of particular interest to that system. For example, TFDM might want all flight plans for flights departing from or arriving at a certain airport, and track updates for flights approaching that airport. Being an FAA system, they would have access to all of the flight data.
- **Non-FAA Government Data Consumer** – This could be a military group or any other government agencythat isauthorized to get data for any flight, but might have very specific data requirements. That is, they might want only a small subset of the message types. Other agencies, such as NASA, might not be authorized to receive military/sensitive data.
- **Non-government Data Consumer** – This could be an airline or a company that shows flight progress and status. They might want only certain flights; for example,

an airline might want position updates for only its own flights. Being non-government entities, they would not have authorization to get data for military/sensitive flights.

4.3 Service Functionality

SFDPS is the SWIM program developed to provide ERAM en-route flight information services to a wide variety of consumers in manner that complies with SWIM standards and requirements. The consumers could be FAA facilities, FAA systems or programs, other government systems or programs, or non-government systems or programs.

A goal of SFDPS is to transform the data it receives from 20 different ERAM sources into a single stream of Extensible Markup Language (XML) formatted text. Each discrete message is further associated with:

- A unique flight identifier so that the consumer knows which flight a message belongs to rather than having to perform message matching.
- The state of the flight as it moves from Proposed to Active to Landed. Flights may also be cancelled.
- A means to know whether a message was sent from an Air Route Traffic Control Center (ARTCC) that is controlling a flight or not. This allows extraneous messages to be ignored.

The effect of these functions is to relieve consumers of the burdens of processing the raw messages themselves. A consumer is able to track flights easily, to know when flights are canceled or delayed, and to know if the flight is affected by a ground-delay program or some other traffic management initiative.

Furthermore, by tagging each message with JMS properties, a consumer can arrange for a filtered feed of messages. A military consumer can receive only messages that relate to military flights, an airline can receive only messages related to its operations, a company that displays live flight data can receive only flight plan messages for the predicted route and track messages for the actual route.

4.4 Security

SFDPS complies with NEMS security requirements as a message producer. NEMS handles identification and authentication of SFDPS consumers. NEMS also performs authorization. When SFDPS is deployed, both operationally with NAS Operational NEMS and with Research and Development NEMS, it is provisioned in “trusted” and “untrusted” regions.

SFDPS obtains updated sensitive flight data tagging files from AJR-2 on a periodic basis or as directed by AJR-2 for time critical requirements. Following the AJR-2 flight data sensitivity identification process, SFDPS uses the information in those files to mark, or tag, service messages as containing sensitive or non-sensitive flight data. During the SWIM on-boarding process, each client is authorized to receive either sensitive or non-sensitive flight data, and is configured accordingly when on-ramped to NEMS. NEMS uses the client configuration and each message’s “Send To” tag (FDPS_Sensitive) to ensure messages with sensitive flight data are only sent to clients authorized to receive sensitive flight data. Flight data tagged as sensitive is Sensitive Security Information (SSI) and must be protected in accordance with FAA Order 1600.75, Protecting Sensitive Unclassified Information (SUI).

4.4.1 Roles

Role	Description
NON-GOVERENMENT-NON-FAA	Access is restricted to non-sensitive data only. SFDPS filters military operations and privacy track data (BARR) sent in real time and marks the filtered data as FDPS_sensitive = false.
GOVERNMENT -NON-FAA	Access to non-military/sensitive data is granted. Access to military/sensitive data may be granted based upon need-to-know (e.g., US Department of Defense has access to all military/sensitve flight data, whereas NASA does not have access). Data is marked FDPS_sensitive=true for unfiltered data or FDPS_sensitive=false for filtered data.
FAA	Unrestricted data access. Data is marked FDPS_sensitive= true.

4.4.2 Access Control Mechanisms

Access Control	Description / Regulating Document
Identification & Authentication	NEMS provides credentials for the JMS-Producer(SFDPS) and JMS-Consumer of SFDPS services.
Authorization	When a client registers to connect to a topic, a process called on-ramping, NEMS assigns a role to the client. SFDPS attaches metadata to each message it sends to NEMS and NEMS applies correct access control rules based on this metadata.

4.5 Quality of Services (QoS)

The SFDPS QoS requirements are as defined in sections 3.11.2, 3.11.3, 3.11.4, and 3.11.5 of the SFDPS SSS. See Reference [2].

4.6 Service Policies

No specific service policies are applied to this service. However, through the consumer on-ramping process, NEMS designates a consumer as either a NAS or non-NAS consumer.

These headers are defined in more detail in Section 5.2.1.

4.7 Environmental Constraints

One instance of SFPDS is deployed to publish into the Research and Development NEMS. This instance of SFPDS has a record type of pre-recorded, which consists of HADDS replay data that was recorded seven days prior to the current date.

DRAFT

The operational implementation of SFDPS is a NAS message producer deployed to publish into the NAS Operational NEMS. The record type is live.

5. Service Interfaces

This section provides detailed information about the types and content of messages that the SFDPS exchanges, message exchange models that the service deploys, and any conditions implied by these messages.

5.1 Interface

SFDPS follows version 1.1 of the JMS specification.

SFPDS uses the Publish/Subscribe messaging model.

5.2 Operations

None.

5.2.1 Processing Considerations

SFDPS publishes flight data in two formats, SimpleXML andFlight Information Exchange Model (FIXM), and it publishes airspace data in two formats, SimpleXML andAirspace Information Exchange Model(AIXM). It publishes operational and general messages only in SimpleXML format. All SimpleXML messages have a one-to-one correspondence between the corresponding CMS message and the SimpleXML output. FIXM and AIXM, as general purpose data exchange models, do not have a complete one-to-one correspondence between the CMS messages and the FIXM or AIXM versions. A small number of fields can not be translated into FIXM and AIXM. These are noted in the data description sections.

In addition to the message body, SFDPS attaches data to each message:

- JMS properties – These allow NEMS to filter the message and deliver it only to those consumers who want it.
- SFDPS properties – These are optional data fields derived from the messages that provide additional information about the message. They provide additional context for the message.

SFDPS processes each flight related message and assigns the following fields based on the contents of the current message and of previous messages for the flight:

- Globally Unique Flight Identifier (GUFI) – This is a unique identifier that identifies all of the messages that belong to one flight. A flight is defined as the operation of an aircraft from take-off to touch-down.
- Flight status – Indicates the current state of a flight, one of proposed, active, landed, cancelled, dropped.
- Flight plan sequence number – the number of flight plans received by a flight.

SFDPS maintains a database of received messages to aid in the processing of flight level data.

SFDPS also sets the following JMS properties based on its stored data:

- Sensitive – Whether the message pertains to a flight that is military/sensitive or not.
- Authoritative – Whether the message was sent from an ARTCC that has control of the flight or not.

SFDPS batches the flight track messages before publishing them to NEMS to reduce bandwidth usage.
All filtering of published data is performed by NEMS as described in the NEMS Interface Control Document (ICD) [see Reference 14].

5.3 Messages

This section describes messages and data properties for the four En Route data publication services supported by SFDPS Java Messaging services. The tables below show cross-references to the subsection which contains the message's detailed description.

EN ROUTE FLIGHT DATA PUBLICATION [Section 5.3.1]		
Message Name	**Message Code**	**Subsection**
Flight Plan Information	FH/FH_FIXM	5.3.1.1
Flight Amendment Information	AH/AH_FIXM	5.3.1.2
Converted Route Information	HX/HX_FIXM	5.3.1.3
Cancellation Information	CL/CL_FIXM	5.3.1.4
Departure Information	DH/DH_FIXM	5.3.1.5
Aircraft Identification Amendment Information	IH/IH_FIXM	5.3.1.6
Hold Information	HH/HH_FIXM	5.3.1.7
Progress Report Information	PH/PH_FIXM	5.3.1.8
Flight Arrival Information	HV/HV_FIXM	5.3.1.9
Flight Plan Update Information	HU/HU_FIXM	5.3.1.10
Expected Departure Time Information[1]	ET/ET_FIXM	5.3.1.11
Position Update Information	HP/HP_FIXM	5.3.1.12
Tentative Flight Plan Information	NP/NP_FIXM	5.3.1.13
Tentative Aircraft Identification Amendment Information	NI/NI_FIXM	5.3.1.14
Tentative Flight Plan Removal	NL/NL_FIXM	5.3.1.15
Tentative Flight Plan Amendment Information	NU/NU_FIXM	5.3.1.16
Batch Track Information	BATCH_TH/ BATCH_TH_FIXM	5.3.1.17

[1] This message could be phased out once it becomes available from its primary source (for ET, this would be TFMS; for HZ, this would be ARTS/STARS).

EN ROUTE FLIGHT DATA PUBLICATION [Section 5.3.1]		
Message Name	**Message Code**	**Subsection**
Drop Track Information	RH/RH_FIXM	5.3.1.18
Interim Altitude Information	LH/LH_FIXM	5.3.1.19
Automated Radar Terminal System (ARTS) Flow Control Track/Full Data Block Information [1]	HZ/HZ_FIXM	5.3.1.20
Beacon Code Reassignment	BA/BA_FIXM	5.3.1.21
Beacon Code Restricted	RE/RE_FIXM	5.3.1.22
FDB Fourth Line Information	HF/HF_FIXM	5.3.1.23
Point Out Information	HT/HT_FIXM	5.3.1.24
Inbound Point Out Information	PT/PT_FIXM	5.3.1.25
Handoff Status	OH/OH_FIXM	5.3.1.26
Flight Plan Reconstitution Message	DBRTFPI/ DBRTFPI_FIXM	5.3.1.27
Flight Data Properties	---	5.3.1.28

EN ROUTE AIRSPACE DATA PUBLICATION [Section 5.3.2]		
Message Name	**Message Code**	**Sub-section**
Sector Assignment Status	SH/SH_AIXM	5.3.2.1
Route Status	HR/HR_AIXM	5.3.2.2
Special Activities Airspace (SAA)	SU/SU_AIXM	5.3.2.3
Altimeter Setting	HA	5.3.2.4
Adapted Route Status Reconsititution	DBRTRI/ DBRTRI_AIXM	5.3.2.5
Altimeter Status Reconstitution	DBRTAI	5.3.2.6
Sector Assignment Reconstitution	DBRTSI/ DBRTSI_AIXM	5.3.2.7
Airspace Data Properties	---	5.3.2.8

EN ROUTE OPERATIONAL DATA PUBLICATION [Section 5.3.3]		
Message Name	**Message Code**	**Sub-section**
Traffic Count Adjustment	AK	5.3.3.1
Instrument Approach Count Adjustment	AC	5.3.3.2
Sign In Sign Out	SY	5.3.3.3
Beacon code Utilization	UB	5.3.3.4

DRAFT

Geographic Beacon Code Utilization	UG	5.3.3.5
Operational Data Properties	---	5.3.3.6

DRAFT

EN ROUTE GENERAL MESSAGE PUBLICATION [Section 5.3.4]		
Message Name	**Message Code**	**Sub-section**
General Information	GH	5.3.4.1
Interim Altitude Status Information	HE	5.3.4.2
Hold Status Information	HO	5.3.4.3
ERAM Status Information	HS	5.3.4.4
Unsuccessful Transmission Information	UI	5.3.4.5
General Message Properties	---	5.3.4.6

5.3.1 Flight Data Publication Service Messages

Frequency estimates provided are based on data received from the operational SFDPS on August 10th, 2015.

5.3.1.1 Flight Plan Information: FH, FH_FIXM

Flight Plan Information: FH, FH_FIXM	
Message Name	Flight Plan Information: FH, FH_FIXM
Message Description	The Flight Plan Message is sent to transfer active and proposed flight plan data. It is generally sent when an ERAM at an ARTCC first creates a new flight record for a flight. Multiple ARTCCs send copies of the same flight plan. A single ARTCC may have multiple flight plans for one flight, although only one should ever be active.
Message Property Descriptions	Refer to Table 5-1, below
Permissible Property Values	Refer to Table 5-1, below
Message ID (if applicable)	N/A
Filter Criteria	Refer to Table 5-1, below
Applicable Topic/Queue	FDPSDATA.IN
Delivery Mode	Nonpersistent
Message Body Type	Text
Estimated Frequency	26.3/sec (Avg), 61/sec (Peak)
Minimum/Maximum Size of message in Simple XML Format (FH) (bytes)	3472/5617
Minimum/Maximum Size of Message in FIXM Format (FH_FIXM) (bytes)	2524/13858

DRAFT

5.3.1.2 Flight Amendment Information: AH, AH_FIXM

Flight Amendment Information: AH, AH_FIXM	
Message Name	Flight Amendment Information: AH, AH_FIXM
Message Description	The Flight Amendment Message is used to resend all data/fields in the Flight Plan Information message when an amendment has been made to one or more of those fields.
Message Property Descriptions	Refer to Table 5-1, below
Permissible Property Values	Refer to Table 5-1, below
Message ID (if applicable)	NA
Filter Criteria	Refer to Table 5-1, below
Applicable Topic/Queue	FDPSDATA.IN
Delivery Mode	Nonpersistent
Message Body Type	Text
Estimated Frequency	3/sec (Avg), 108/sec (Peak)
Minimum/Maximum Size of Message in Simple XML format (AH) (bytes)	3185/5610
Minimum/Maximum Size of Message in FIXM Format (AH_FIXM) (bytes)	2571/13857

5.3.1.3 Converted Route Information: HX, HX_FIXM

Converted Route Information: HX, HX_FIXM	
Message Name	Converted Route Information: HX, HX_FIXM
Message Description	The Converted Route Message is sent to provide the fixes along the route and calculated time of arrival at each fix, as computed by ERAM. It should be re-sent whenever an FH, AH, DH, or HU is sent.
Message Property Descriptions	Refer to Table 5-1, below
Permissible Property Values	Refer to Table 5-1, below
Message ID (if applicable)	NA
Filter Criteria	Refer to Table 5-1, below
Applicable Topic/Queue	FDPSDATA.IN
Delivery Mode	Nonpersistent
Message Body Type	Text
Estimated Frequency	4.1/sec (Avg), 107/sec (Peak)
Minimum/Maximum Size of	2812/10947

DRAFT

Converted Route Information: HX, HX_FIXM	
Message in Simple XML format (HX) (bytes)	
Minimum/Maximum Size of Message in FIXM Format (HX_FIXM) (bytes)	1585/9558

5.3.1.4 Cancellation Information: CL, CL_FIXM

Cancellation Information: CL, CL_FIXM	
Message Name	Cancellation Information: CL, CL_FIXM
Message Description	The Cancellation Message is sent when a flight plan record is canceled within a particular ARTCC's ERAM. This means that no more data is sent from that center for that flight plan.
Message Property Descriptions	Refer to Table 5-1, below
Permissible Property Values	Refer to Table 5-1, below
Message ID (if applicable)	NA
Filter Criteria	Refer to Table 5-1, below
Applicable Topic/Queue	FDPSDATA.IN
Delivery Mode	Nonpersistent
Message Body Type	Text
Estimated Frequency	.9/sec (Avg), 27/sec (Peak)
Minimum/Maximum Size of Message in Simple XML format (CL) (bytes)	2488/2716
Minimum/Maximum Size of Message in FIXM Format (CL_FIXM) (bytes)	1140/2103

5.3.1.5 Departure Information: DH, DH_FIXM

Departure Information: DH, DH_FIXM	
Message Name	Departure Information: DH, DH_FIXM
Message Description	Departure Message – Provides departure related data for a flight plan. If the flight plan was proposed, the DH indicates the flight is now active.
Message Property Descriptions	Refer to Table 5-1, below
Permissible Property Values	Refer to Table 5-1, below

DRAFT

Departure Information: DH, DH_FIXM	
Message ID (if applicable)	NA
Filter Criteria	Refer to Table 5-1, below
Applicable Topic/Queue	FDPSDATA.IN
Delivery Mode	Nonpersistent
Message Body Type	Text
Estimated Frequency	.3/sec (Avg), 6/sec (Peak)
Minimum/Maximum Size of Message in Simple XML format (DH) (bytes)	2753/3963
Minimum/Maximum Size of Message in FIXM Format (DH_FIXM) (bytes)	1448/2503

5.3.1.6 Aircraft Identification Amendment Information: IH, IH_FIXM

Aircraft Identification Amendment Information: IH, IH_FIXM	
Message Name	Aircraft Identification Amendment Information: IH, IH_FIXM
Message Description	The Aircraft Identifier Amendment Message is sent to indicate a change to the flight identification field (**flightId_02a**) or assignment of computer identification (**computerId_02d**) for a flight.
Message Property Descriptions	Refer to Table 5-1, below
Permissible Property Values	Refer to Table 5-1, below
Message ID (if applicable)	NA
Filter Criteria	Refer to Table 5-1, below
Applicable Topic/Queue	FDPSDATA.IN
Delivery Mode	Nonpersistent
Message Body Type	Text
Estimated Frequency	9.5/hour (Avg), 2/sec (Peak)
Minimum/Maximum Size of Message in Simple XML format (IH) (bytes)	2635/2817
Minimum/Maximum Size of message in FIXM Format (IH_FIXM) (bytes)	1263/1960

DRAFT

5.3.1.7 Hold Information: HH, HH_FIXM

Hold Information: HH, HH_FIXM	
Message Name	Hold Information: HH, HH_FIXM
Message Description	The Hold Message indicates a hold of a definite duration, an indefinite hold, or hold release for a specified flight.
Message Property Descriptions	Refer to Table 5-1, below
Permissible Property Values	Refer to Table 5-1, below
Message ID (if applicable)	NA
Filter Criteria	Refer to Table 5-1, below
Applicable Topic/Queue	FDPSDATA.IN
Delivery Mode	Nonpersistent
Message Body Type	Text
Estimated Frequency	.6/min (Avg), 3/sec (Peak)
Minimum/Maximum Size of Message in Simple XML format (HH) (bytes)	2434/2710
Minimum/Maximum Size of Message in FIXM Format (HH_FIXM) (bytes)	1090/2466

5.3.1.8 Progress Report Information: PH, PH_FIXM

Progress Report Information: PH, PH_FIXM	
Message Name	Progress Report Information: PH, PH_FIXM
Message Description	The Progress Report Message is sent from ERAM to update the position for an active flight, or to release it from a prior hold status.
Message Property Descriptions	Refer to Table 5-1, below
Permissible Property Values	Refer to Table 5-1, below
Message ID (if applicable)	NA
Filter Criteria	Refer to Table 5-1, below
Applicable Topic/Queue	FDPSDATA.IN
Delivery Mode	Nonpersistent
Message Body Type	Text
Estimated Frequency	.46/hour (Avg), 1/sec (Peak)
Minimum/Maximum Size of Message in Simple XML format (PH) (bytes)	2681/2721

DRAFT

Progress Report Information: PH, PH_FIXM	
Minimum/Maximum Size of Message in FIXM Format (PH_FIXM) (bytes)	1000/1500

5.3.1.9 Flight Arrival Information: HV, HV_FIXM

Flight Arrival Information: HV, HV_FIXM	
Message Name	Flight Arrival Information: HV, HV_FIXM
Message Description	The Flight Arrival Message provides arrival data from ERAM for any arriving flight.
Message Property Descriptions	Refer to Table 5-1, below
Permissible Property Values	Refer to Table 5-1, below
Message ID (if applicable)	NA
Filter Criteria	Refer to Table 5-1, below
Applicable Topic/Queue	FDPSDATA.IN
Delivery Mode	Nonpersistent
Message Body Type	Text
Estimated Frequency	.3/sec (Avg), 7/sec (Peak)
Minimum/Maximum Size of Message in Simple XML format (HV) (bytes)	2537/2756
Minimum/Maximum Size of Message in FIXM Format (HV_FIXM) (bytes)	1373/2158

5.3.1.10 Flight Plan Update Information: HU, HU_FIXM

Flight Plan Update Information: HU, HU_FIXM	
Message Name	Flight Plan Update Information: HU, HU_FIXM
Message Description	The Flight Plan Update Message is sent to provide the latest flight plan data on an active flight when a new ARTCC assumes control of that flight.
Message Property Descriptions	Refer to Table 5-1, below
Permissible Property Values	Refer to Table 5-1, below
Message ID (if applicable)	NA
Filter Criteria	Refer to Table 5-1, below

DRAFT

Flight Plan Update Information: HU, HU_FIXM	
Applicable Topic/Queue	FDPSDATA.IN
Delivery Mode	Nonpersistent
Message Body Type	Text
Estimated Frequency	.5/sec (Avg), 7/sec (Peak)
Minimum/Maximum Size of Message in Simple XML format (HU) (bytes)	3234/5065
Minimum/Maximum Size of message in FIXM Format (HU_FIXM) (bytes)	2789/13857

5.3.1.11 Expected Departure Time Information: ET, ET_FIXM

Expected Departure Time Information: ET, ET_FIXM	
Message Name	Expected Departure Time Information: ET, ET_FIXM
Message Description	The Expected Departure Time Message provides Estimated Departure Clearance Time (EDCT) information; that is, the assigned departure time for a proposed flight plan inbound to a controlled airport with a ground delay in effect, and is used to cancel a previously issued EDCT. The original source of this data is TFMS.
Message Property Descriptions	Refer to Table 5-1, below
Permissible Property Values	Refer to Table 5-1, below
Message ID (if applicable)	NA
Filter Criteria	Refer to Table 5-1, below
Applicable Topic/Queue	FDPSDATA.IN
Delivery Mode	Nonpersistent
Message Body Type	Text
Estimated Frequency	1.2/min (Avg), 21/sec (Peak)
Minimum/Maximum Size of Message in Simple XML format (ET) (bytes)	2435/2658
Minimum/Maximum Size of message in FIXM Format (ET_FIXM) (bytes)	2157/2167

DRAFT

5.3.1.12 Position Update Information: HP, HP_FIXM

Position Update Information: HP, HP_FIXM	
Message Name	Position Update Information: HP, HP_FIXM
Message Description	The Position Update Message is sent to update the coordination time on an active flight when the present position fix time is updated.
Message Property Descriptions	Refer to Table 5-1, below
Permissible Property Values	Refer to Table 5-1, below
Message ID (if applicable)	NA
Filter Criteria	Refer to Table 5-1, below
Applicable Topic/Queue	FDPSDATA.IN
Delivery Mode	Nonpersistent
Message Body Type	Text
Estimated Frequency	4.2/sec (Avg), 52/sec (Peak)
Minimum/Maximum Size of Message in Simple XML format (HP) (bytes)	2588/2849
Minimum/Maximum Size of message in FIXM Format (HP_FIXM) (bytes)	1188/2147

5.3.1.13 Tentative Flight Plan Information: NP, NP_FIXM

Tentative Flight Plan Information: NP, NP_FIXM	
Message Name	Tentative Flight Plan Information: NP, NP_FIXM
Message Description	The Tentative Flight Plan Message is sent when a controller creates a temporary, partial set of flight plan data and associates it with a flight. It includes the source, flight identification, and may include optional UFPI (ERAM-GUFI), aircraft data, type of aircraft, airborne equipment qualifier, beacon code, speed, assigned altitude, reported altitude, and interim altitude. Often, many of these fields are missing. A tentative flight plan may be either canceled or merged with a real flight plan (FH). In the latter case, the FH might have the same Site Specific Plan Identifier (**sspId_167a**) and Computer ID (**computerId_02d**) as the NP, or it may be different. An NP can be issued only for an active flight.
Message Property Descriptions	Refer to Table 5-1, below
Permissible Property Values	Refer to Table 5-1, below
Message ID (if applicable)	NA

DRAFT

Tentative Flight Plan Information: NP, NP_FIXM	
Filter Criteria	Refer to Table 5-1, below
Applicable Topic/Queue	FDPSDATA.IN
Delivery Mode	Nonpersistent
Message Body Type	Text
Estimated Frequency	.6/min (Avg), 3/sec (Peak)
Minimum/Maximum Size of Message in Simple XML format (NP) (bytes)	2614/2818
Minimum/Maximum Size of Message in FIXM Format (NP_FIXM) (bytes)	1058/1291

5.3.1.14 Tentative Aircraft Identification Amendment Information: NI, NI_FIXM

Tentative Aircraft Identification Amendment Information: NI, NI_FIXM	
Message Name	Tentative Aircraft Identification Amendment Information: NI, NI_FIXM
Message Description	The Tentative Aircraft Identifier Amendment Message is sent from ERAM to indicate a change to the flight identification field (**flightId_02a**) of a tentative flight plan.
Message Property Descriptions	Refer to Table 5-1, below
Permissible Property Values	Refer to Table 5-1, below
Message ID (if applicable)	NA
Filter Criteria	Refer to Table 5-1, below
Applicable Topic/Queue	FDPSDATA.IN
Delivery Mode	Nonpersistent
Message Body Type	Text
Estimated Frequency	23/day (Avg), 1/sec (Peak)
Minimum/Maximum Size of Message in Simple XML format (NI) (bytes)	2612/2619
Minimum/Maximum Size of Message in FIXM Format (NI_FIXM) (bytes)	1345/1348

DRAFT

5.3.1.15 Tentative Flight Plan Removal: NL, NL_FIXM

Tentative Flight Plan Removal: NL, NL_FIXM	
Message Name	Tentative Flight Plan Removal: NL, NL_FIXM
Message Description	The Tentative Flight Plan Removal Message is sent to indicate the removal of a tentative flight plan; may indicate that the tentative flight plan has been merged with a normal flight plan.
Message Property Descriptions	Refer to Table 5-1, below
Permissible Property Values	Refer to Table 5-1, below
Message ID (if applicable)	NA
Filter Criteria	Refer to Table 5-1, below
Applicable Topic/Queue	FDPSDATA.IN
Delivery Mode	Nonpersistent
Message Body Type	Text
Estimated Frequency	.6/min (Avg), 2/sec (Peak)
Minimum/Maximum Size of Message in Simple XML format (NL) (bytes)	2434/2761
Minimum/Maximum Size of Message in FIXM Format (NL_FIXM) (bytes)	1308/1924

5.3.1.16 Tentative Flight Plan Amendment Information: NU, NU_FIXM

Tentative Flight Plan Amendment Information: NU, NU_FIXM	
Message Name	Tentative Flight Plan Amendment Information: NU, NU_FIXM
Message Description	The Tentative Flight Amendment Message is used to update tentative flight plan data.
Message Property Descriptions	Refer to Table 5-1, below
Permissible Property Values	Refer to Table 5-1, below
Message ID (if applicable)	NA
Filter Criteria	Refer to Table 5-1, below
Applicable Topic/Queue	FDPSDATA.IN
Delivery Mode	Nonpersistent
Message Body Type	Text
Estimated Frequency	7.4/hour (Avg), 2/sec (Peak)
Minimum/Maximum Size of Message in Simple XML format	2480/2763

DRAFT

Tentative Flight Plan Amendment Information: NU, NU_FIXM	
(NU) (bytes)	
Minimum/Maximum Size of Message in FIXM Format (NU_FIXM) (bytes)	1375/2989

5.3.1.17 Batch Track Information: BATCH_TH, BATCH_TH_FIXM

Batch Track Information: BATCH_TH, BATCH_TH_FIXM	
Message Name	Batch Track Information: BATCH_TH, BATCH_TH_FIXM
Message Description	The Batch Track Message includes multiple individual Track Messages. The single Track message provides track data/target information, such as aircraft track/target position, altitude, and speed. It is normally sent every 12 seconds for an active flight.
Message Property Descriptions	Refer to Table 5-1, below
Permissible Property Values	Refer to Table 5-1, below
Message ID (if applicable)	NA
Filter Criteria	Refer to Table 5-1, below
Applicable Topic/Queue	FDPSDATA.IN
Delivery Mode	Nonpersistent
Message Body Type	Text
Estimated Frequency of Message in Simple XML format (BATCH_TH)	114/sec
Estimated Frequeny of Message in FIXM Format (BATCH_TH_FIXM)	109/sec
Minimum/Maximum Size of Message in Simple XML format (BATCH_TH) (bytes)	893/199,503
Minimum/Maximum Size of Message in FIXM Format (BATCH_TH_FIXM) (bytes)	2187/284,851

5.3.1.18 Drop Track Information: RH, RH_FIXM

Drop Track Information: RH, RH_FIXM	
Message Name	Drop Track Information: RH, RH_FIXM
Message Description	The Drop Track Message indicates that an ARTCC has discontinued

DRAFT

Drop Track Information: RH, RH_FIXM	
	tracking of a particular flight.
Message Property Descriptions	Refer to Table 5-1, below
Permissible Property Values	Refer to Table 5-1, below
Message ID (if applicable)	NA
Filter Criteria	Refer to Table 5-1, below
Applicable Topic/Queue	FDPSDATA.IN
Delivery Mode	Nonpersistent
Message Body Type	Text
Estimated Frequency	.4/sec (Avg), 6/sec (Peak)
Minimum/Maximum Size of Message in Simple XML format (RH) (bytes)	2384/2602
Minimum/Maximum Size of Message in FIXM Format (RH_FIXM) (bytes)	993/2097

5.3.1.19 Interim Altitude Information: LH, LH_FIXM

Interim Altitude Information: LH, LH_FIXM	
Message Name	Interim Altitude Information: LH, LH_FIXM
Message Description	The Interim Altitude Message provides an ATM Intermediate Point of Presence (IPOP) with interim altitude data for a flight.
Message Property Descriptions	Refer to Table 5-1, below
Permissible Property Values	Refer to Table 5-1, below
Message ID (if applicable)	NA
Filter Criteria	Refer to Table 5-1, below
Applicable Topic/Queue	FDPSDATA.IN
Delivery Mode	Nonpersistent
Message Body Type	Text
Estimated Frequency	1.7/sec (Avg), 19/sec (Peak)
Minimum/Maximum Size of Message in Simple XML format (LH) (bytes)	2425/2643
Minimum/Maximum Size of Message in FIXM Format (LH_FIXM) (bytes)	1050/2161

DRAFT

5.3.1.20 ARTS Flow Control Track/Full Data Block Information: HZ, HZ_FIXM

Automated Radar Terminal System (ARTS) Flow Control Track/Full Data Block Information: HZ, HZ_FIXM	
Message Name	ARTS Flow Control Track/Full Data Block Information: HZ, HZ_FIXM
Message Description	The ARTS TZ Flow Control Track/Full Data Block (FDB) Message provides a position update from an ARTS; this is a data pass-through.
Message Property Descriptions	Refer to Table 5-1, below
Permissible Property Values	Refer to Table 5-1, below
Message ID (if applicable)	NA
Filter Criteria	Refer to Table 5-1, below
Applicable Topic/Queue	FDPSDATA.IN
Delivery Mode	Nonpersistent
Message Body Type	Text
Estimated Frequency	3.3/sec (Avg), 36/sec (Peak)
Minimum/Maximum Size of Message in Simple XML format (HZ) (bytes)	2597/2819
Minimum/Maximum Size of Message in FIXM Format (HZ_FIXM) (bytes)	1631/2746

5.3.1.21 Beacon Code Reassignment: BA, BA_FIXM

Beacon Code Reassignment: BA, BA_FIXM	
Message Name	Beacon Code Reassignment: BA, BA_FIXM
Message Description	The Beacon Code Reassignment Message provides an updated beacon code for a flight plan when ERAM determines that an automatic beacon code reassignment occurred because the requested beacon code was already in use by another aircraft.
Message Property Descriptions	Refer to Table 5-1, below
Permissible Property Values	Refer to Table 5-1, below
Message ID (if applicable)	NA
Filter Criteria	Refer to Table 5-1, below
Applicable Topic/Queue	FDPSDATA.IN
Delivery Mode	Nonpersistent
Message Body Type	Text

DRAFT

Beacon Code Reassignment: BA, BA_FIXM	
Estimated Frequency	.1/sec (Avg), 5/sec (Peak)
Minimum/Maximum Size of Message in Simple XML format (BA) (bytes)	2764/2933
Minimum/Maximum Size of Message in FIXM Format (BA_FIXM) (bytes)	1408/2309

5.3.1.22 Beacon Code Restricted: RE, RE_FIXM

Beacon Code Restricted: RE, RE_FIXM	
Message Name	Beacon Code Restricted: RE, RE_FIXM
Message Description	The Beacon Code Restricted Message provides an updated beacon code for a flight when ERAM determines that a beacon code reassignment occurred because the requested beacon code is adapted as restricted.
Message Property Descriptions	Refer to Table 5-1, below
Permissible Property Values	Refer to Table 5-1, below
Message ID (if applicable)	NA
Filter Criteria	Refer to Table 5-1, below
Applicable Topic/Queue	FDPSDATA.IN
Delivery Mode	Nonpersistent
Message Body Type	Text
Estimated Frequency	5.3/hour (Avg), 2/sec (Peak)
Minimum/Maximum Size of Message in Simple XML format (RE) (bytes)	2828/2985
Minimum/Maximum Size of Message in FIXM Format (RE_FIXM) (bytes)	1473/2373

5.3.1.23 FDB Fourth Line Information: HF, HF_FIXM

FDB Fourth Line Information: HF, HF_FIXM	
Message Name	FDB Fourth Line Information: HF, HF_FIXM
Message Description	The FDB Fourth Line Message is used to send the displayable, user-specified FDB fourth line data stored in ERAM; this can be heading, speed, or free-form text.

DRAFT

FDB Fourth Line Information: HF, HF_FIXM	
Message Property Descriptions	Refer to Table 5-1, below
Permissible Property Values	Refer to Table 5-1, below
Message ID (if applicable)	NA
Filter Criteria	Refer to Table 5-1, below
Applicable Topic/Queue	FDPSDATA.IN
Delivery Mode	Nonpersistent
Message Body Type	Text
Estimated Frequency	.9/sec (Avg), 10/sec (Peak0
Minimum/Maximum Size of Message in Simple XML format (HF) (bytes)	2383/2713
Minimum/Maximum Size of Message in FIXM Format (HF_FIXM) (bytes)	994/2283

5.3.1.24 Point Out Information: HT, HT_FIXM

Point Out Information: HT, HT_FIXM	
Message Name	Point Out Information: HT, HT_FIXM
Message Description	The Point Out Message provides inter-facility and intra-facility point out information when these actions occur.
Message Property Descriptions	Refer to Table 5-1, below
Permissible Property Values	Refer to Table 5-1, below
Message ID (if applicable)	NA
Filter Criteria	Refer to Table 5-1, below
Applicable Topic/Queue	FDPSDATA.IN
Delivery Mode	Nonpersistent
Message Body Type	Text
Estimated Frequency	.3/sec (Avg), 10/sec (Peak)
Minimum/Maximum Size of Message in Simple XML format (HT) (bytes)	2493/2796
Minimum/Maximum Size of Message in FIXM Format (HT_FIXM) (bytes)	1366/2585

DRAFT

5.3.1.25 Inbound Point Out Information: PT, PT_FIXM

Inbound Point Out Information: PT, PT_FIXM	
Message Name	Inbound Point Out Information: PT, PT_FIXM
Message Description	The Inbound Point Out Message is sent by ERAM upon receipt of an inter-facility point out message from another center.
Message Property Descriptions	Refer to Table 5-1, below
Permissible Property Values	Refer to Table 5-1, below
Message ID (if applicable)	NA
Filter Criteria	Refer to Table 5-1, below
Applicable Topic/Queue	FDPSDATA.IN
Delivery Mode	Nonpersistent
Message Body Type	Text
Estimated Frequency	1.2/min (Avg), 2/sec (Peak)
Minimum/Maximum Size of Message in Simple XML format (PT) (bytes)	2624/2835
Minimum/Maximum Size of Message in FIXM Format (PT_FIXM) (bytes)	1368/2468

5.3.1.26 Handoff Status: OH, OH_FIXM

Handoff Status: OH, OH_FIXM	
Message Name	Handoff Status: OH, OH_FIXM
Message Description	The Handoff Status Message is sent when a handoff is initiated, accepted, control is taken away (assert control), or retracted, or when the failure of handoff is detected. It includes field **handoffEventIndicator_336a**, a single letter value, where the letter stands for: **I** = Initiation; **A** = Acceptance; **R** = Retraction; **T** = Take Control (Assert Control); **U** = Update; **F** = Failure
Message Property Descriptions	Refer to Table 5-1, below
Permissible Property Values	Refer to Table 5-1, below
Message ID (if applicable)	NA
Filter Criteria	Refer to Table 5-1, below
Applicable Topic/Queue	FDPSDATA.IN
Delivery Mode	Nonpersistent

DRAFT

Handoff Status: OH, OH_FIXM	
Message Body Type	Text
Estimated Frequency	6.1/sec (Avg), 73/sec (Peak)
Minimum/Maximum Size of Message in Simple XML format (OH) (bytes)	2687/3019
Minimum/Maximum Size of Message in FIXM Format (OH_FIXM) (bytes)	1532/2764

5.3.1.27 Flight Plan Reconstitution: DBRTFPI, DBRTFPI_FIXM

Flight Plan Reconstitution: DBRTFPI, DBRTFPI_FIXM	
Message Name	Flight Plan Reconstitution: DBRTFPI, DBRTFPI_FIXM
Message Description	The Flight Plan Reconstitution Message is sent when a client first connects to a HADDS or when it reconnects to a HADDS after communication between the client and HADDS is disrupted.
Message Property Descriptions	Refer to Table 5-1, below
Permissible Property Values	Refer to Table 5-1, below
Message ID (if applicable)	NA
Filter Criteria	Refer to Table 5-1, below
Applicable Topic/Queue	FDPSDATA.IN
Delivery Mode	Nonpersistent
Message Body Type	Text
Estimated Frequency	.6/min (Avg), 293/sec (Peak)
Minimum/Maximum Size of Message in Simple XML format (DBRTFPI) (bytes)	2779/8039
Minimum/Maximum Size of Message in FIXM Format (DBRTFPI_FIXM) (bytes)	1066/12942

DRAFT

5.3.1.28 Flight Data Properties

Table 5-1: Flight Data Properties

Property Name	Description	Permissible Values
FDPS_SourceFacility	This property, of type String, indicates the source, the ARTCC, of the CMS message that caused this message to be published.	ZAB, ZAU, ZBW, ZDC, ZDV, ZFW, ZHU, ZID, ZJX, ZKC, ZLA, ZLC, ZMA, ZME, ZMP, ZNY, ZOA, ZOB, ZSE, ZTL
FDPS_SourceSystem	This property, of type String, indicates the specific instance of SFDPS that published the message. A change in the value of this property indicates that the producer has switched from one site to the other.	FDPS1, FDPS2
FDPS_MessageType	This property, of type String, indicates the type of message	FH, AH, HX, CL, DH, IH, HH, PH, HV, HU, ET, HP, NP, NI, NL, NU, BATCH_TH, RH, LH, HZ, BA, RE, HF, HT, PT, OH, FH_FIXM, AH_FIXM, HX_FIXM, CL_FIXM, DH_FIXM, IH_FIXM, HH_FIXM, PH_FIXM, HV_FIXM, HU_FIXM, ET_FIXM, HP_FIXM, NP_FIXM, NI_FIXM, NL_FIXM, NU_FIXM, BATCH_TH_FIXM, RH_FIXM, LH_FIXM, HZ_FIXM, BA_FIXM, RE_FIXM, HF_FIXM, HT_FIXM, PT_FIXM, OH_FIXM, DBRTFPI, DBRTFPI_FIXM

DRAFT

Property Name	Description	Permissible Values
FDPS_FlightOperator	This property, of type String, indicates the operator of the flight that caused this message to be published.	While this property may contain any three-letter code or none, only those listed below are available for routing due to limitations of NEMS: DAL,SWA,UAL,AAL,USA,ASQ,JBU,SKW, TRS, ASA,WJA,NKS,FFT,HAL,AAY,UPS,FDX This property is not available as a JMS property for the BATCH_TH and BATCH_TH_FIXM messages. However, for the SimpleXML formatted messages, it is available as an SFDPS property (propFlightOperator) of each individual Track message within the BATCH_TH message. For the FIXM formatted messages, it is specified as an attribute in each individual Track message within the BATCH_TH_FIXM message: *flight/operator/operatingOrganization/organization/@name*.
FDPS_Origin	This property, of type String, indicates the originating airport of the flight to which this message applies.	While this property may contain any destination or none, only those listed below are available for routing due to limitations of NEMS: KATL,KBOS,KBWI,KCLE,KCLT,KCVG, KDCA,KDEN,KDFW,KDTW,KEWR,KFLL, KHNL,KIAD,KIAH,KJFK,KLAS,KLAX, KLGA,KMCO,KMDW,KMEM,KMIA,KMSP, KORD,KPDX,KPHL,KPHX,KPIT,KSAN,KSEA, KSFO,KSLC,KSTL,KTPA This property is not available as a JMS property for the BATCH_TH and BATCH_TH_FIXM messages. For the SimpleXML formatted messages, it is specified as a property (propOrigin) of each individual Track message within the BATCH_TH message. For the FIXM formatted messages, it is specified as an attribute in each individual Track message within the BATCH_TH_FIXM message: *flight/departure/@departurePoint*.

DRAFT

Property Name	Description	Permissible Values
FDPS_DestId	This property, of type String, indicates the destination airport of the flight to which this message applies.	While this property may contain any destination or none, only those listed below are available for routing due to limitations of NEMS: KATL,KBOS,KBWI,KCLE,KCLT,KCVG, KDCA,KDEN,KDFW,KDTW,KEWR,KFLL, KHNL,KIAD,KIAH,KJFK,KLAS,KLAX, KLGA,KMCO,KMDW,KMEM,KMIA,KMSP, KORD,KPDX,KPHL,KPHX,KPIT,KSAN,KSEA, KSFO,KSLC,KSTL,KTPA This property is not available as a JMS property for the BATCH_TH and BATCH_TH_FIXM messages. For the SimpleXML formatted messages, it is specified as a property (propDestination) of each individual Track message within the BATCH_TH message. For the FIXM formatted messages, it is specified as an attribute in each individual Track message within the BATCH_TH_FIXM message: *flight/arrival/@arrivalPoint*.
FDPS_Sensitive	This property, of type Boolean, indicates whether the flight to which this message applies is military/sensitive or not.	TRUE – The flight is military/sensitive FALSE – The flight is neither military nor sensitive
FDPS_Authoritative	This property, of type Boolean, indicates whether the CMS message that caused this message to be published was sent from an Source Facility or ARTCC that was the authoritative or controlling Center of the flight.	TRUE – The CMS message came from the controlling center FALSE – The CMS message did not come from the controlling center

DRAFT

Property Name	Description	Permissible Values
FDPS_Recon	This property, of type Boolean, indicates whether this message was generated as the result of a data reconstitution.	TRUE – The message was generated as the result of a data reconstitution. FALSE – The message was not generated as the result of a data reconstitution. Value is set only for reconsisitution messages, DBRTFPI, DBRTPFI_FIXM.
FDPS_DataType	This property, of type String, indicates the type of data publication this message is part of.	FlightSimpleXML, FlightFIXM

5.3.2 Airspace Data Publication Service Messages

5.3.2.1 Sector Assignment Status: SH, SH_AIXM

Sector Assignment Status: SH, SH_AIXM	
Message Name	Sector Assignment Status: SH, SH_AIXM
Message Description	The Sector Assignment Status Message is used to communicate current sector and TRACON configurations. A sector or TRACON may either be closed or open. If the sector or TRACON is open, it is composed of one or more FAVs.
Message Property Descriptions	Refer to Table 5-2, below
Permissible Property Values	Refer to Table 5-2, below
Message ID (if applicable)	NA
Filter Criteria	Refer to Table 5-2, below
Applicable Topic/Queue	FDPSDATA.IN
Delivery Mode	Nonpersistent
Message Body Type	Text
Estimated Frequency	1.2/min (Avg), 6/sec (Peak)
Minimum/Maximum Size of the Message in Simple XML Format (SH) (bytes)	8325/16677

Sector Assignment Status: SH, SH_AIXM	
Minimum/Maximum Size of the Message in AIXM Format (SH_AIXM) (bytes)	60760/115008

DRAFT

5.3.2.2 Route Status: HR, HR_AIXM

Route Status: HR, HR_AIXM	
Message Name	Route Status: HR, HR_AIXM
Message Description	A Route Status message is used to communicate whether some adapted departure and/or arrival routes are active or not. A route status is indicated by the route name followed by either "ON" or "OFF." ERAM generates an HR when an assignment at a center changes, or when reconstituting data. A single HR contains only route assignments for that one center, and can include one or more routes.
Message Property Descriptions	Refer to Table 5-2, below
Permissible Property Values	Refer to Table 5-2, below
Message ID (if applicable)	NA
Filter Criteria	Refer to Table 5-2, below
Applicable Topic/Queue	FDPSDATA.IN
Delivery Mode	Nonpersistent
Message Body Type	Text
Estimated Frequency	12/hour (Avg), 9/sec (Peak)
Minimum/Maximum Size of Message in Simple XML format (HR) (bytes)	1885/38401
Minimum/Maximum Size of Message in AIXM format (HR_AIXM) (bytes)	4845/993377

5.3.2.3 Special Activities Airspace (SAA): SU, SU_AIXM

Special Activities Airspace (SAA): SU, SU_AIXM	
Message Name	Special Activities Airspace (SAA): SU, SU_AIXM
Message Description	The SAA Information message provides the status and schedules for the SAA.
Message Property Descriptions	Refer to Table 5-2, below
Permissible Property Values	Refer to Table 5-2, below
Message ID (if applicable)	NA
Filter Criteria	Refer to Table 5-2, below
Applicable Topic/Queue	FDPSDATA.IN
Delivery Mode	Nonpersistent

DRAFT

Special Activities Airspace (SAA): SU, SU_AIXM	
Message Body Type	Text
Estimated Frequency	31/hour (Avg), 7/sec (Peak)
Minimum/Maximum Size of the Message in Simple XML Format (SU) (bytes)	1821/6063
Minimum/Maximum Size of the Message in AIXM Format (SU_AIXM) (bytes)	2224/24225

5.3.2.4 Altimeter Setting: HA

Altimeter Setting: HA	
Message Name	Altimeter Setting: HA
Message Description	An Altimeter-Setting message is used to communicate altimeter reference data for a particular station, generally an airport. The altimeter reference data includes the data reporting time (35a), the reporting station (13.3), and the altimeter setting (34a). ERAM generates an HA when an altimeter setting is processed. ERAM receives most altimeter settings from the Weather Message Switching Center Replacement (WMSCR), but occasionally a value might be entered by a controller. Either source causes ERAM to generate an HA message; there is no way to distinguish the source. ERAM at an ARTCC may receive altimeter data for many stations, both internal and external to that ARTCC. As a result, SFDPS may receive multiple copies of altimeter setting data for a particular station. For example, SFDPS could receive HA messages from ZBW, ZNY, ZDC, ZOB, ZTL, and ZLA for the airport DCA. In almost all cases, these messages are copies of the same data; that is, they have the same data reporting time and altimeter setting.
Message Property Descriptions	Refer to Table 5-2, below
Permissible Property Values	Refer to Table 5-2 , below
Message ID (if applicable)	NA
Filter Criteria	Refer to Table 5-2, below
Applicable Topic/Queue	FDPSDATA.IN
Delivery Mode	Nonpersistent
Message Body Type	Text
Estimated Frequency	.9/sec (Avg), 578/sec (Peak)
Minimum/Maximum Size of the Message in Simple XML Format (bytes)	1835/1900

DRAFT

5.3.2.5 Adapted Route Status Reconstitution: DBRTRI, DBRTRI_AIXM

Adapted Route Status Reconstitution: DBRTRI, DBRTRI_AIXM	
Message Name	Adapted Route Status Reconstitution: DBRTRI, DBRTRI_AIXM
Message Description	The Adapted Route Status Reconstitution message is sent when a client first connects to a HADDS or when a client reconnects to a HADDS due to a disruption in communication.
Message Property Descriptions	Refer to Table 5-2, below
Permissible Property Values	Refer to Table 5-2 , below
Message ID (if applicable)	NA
Filter Criteria	Refer to Table 5-2, below
Applicable Topic/Queue	FDPSDATA.IN
Delivery Mode	Nonpersistent
Message Body Type	Text
Estimated Frequency	.1/sec (Avg), 2091/sec (Peak)
Minimum/Maximum Size of the Message in Simple XML Format (DBRTRI) (bytes)	1919/1922
Minimum/Maximum Size of the Message in AIXM Format (DBRTRI_AIXM) (bytes)	4858/4860

5.3.2.6 Altimeter Status Reconstitution: DBRTAI

Altimeter Status Reconstitution: DBRTAI	
Message Name	Altimeter Status Reconstitution: DBRTAI
Message Description	The Altimeter Status Reconstitution message is sent when a client first connects to a HADDS or when a client reconnects to a HADDS due to a disruption in communication.
Message Property Descriptions	Refer to Table 5-2, below
Permissible Property Values	Refer to Table 5-2 , below
Message ID (if applicable)	NA
Filter Criteria	Refer to Table 5-2, below
Applicable Topic/Queue	FDPSDATA.IN
Delivery Mode	Nonpersistent
Message Body Type	Text

DRAFT

Altimeter Status Reconstitution: DBRTAI	
Estimated Frequency	.6/min (Avg), 229/sec (Peak)
Minimum/Maximum Size of the Message in Simple XML Format (bytes)	1902/1969

5.3.2.7 Sector Assignment Reconstitution: DBRTSI, DBRTSI_AIXM

Sector Assignment Reconstitution: DBRTSI, DBRTRSI_AIXM	
Message Name	Sector Assignment Reconstitution: DBRTSI, DBRTSI_AIXM
Message Description	The Sector Assignment Reconstitution message is sent when a client first connects to a HADDS or when a client reconnects to a HADDS due to a disruption in communication.
Message Property Descriptions	Refer to Table 5-2, below
Permissible Property Values	Refer to Table 5-2 , below
Message ID (if applicable)	NA
Filter Criteria	Refer to Table 5-2, below
Applicable Topic/Queue	FDPSDATA.IN
Delivery Mode	Nonpersistent
Message Body Type	Text
Estimated Frequency	11.1/hour (Avg), 65/sec (Peak)
Minimum/Maximum Size of the Message in Simple XML Format (DBRTSI) (bytes)	1912/5779 9
Minimum/Maximum Size of the Message in AIXM Format (DBRTSI_AIXM) (bytes)	2166/9145

5.3.2.8 Airspace Data Properties

Table 5-2: Airspace Data Properties

Property Name	Description	Permissible Values
FDPS_SourceFacility	This property, of type String, indicates the source, the ARTCC, of the CMS message that caused this message to be published.	ZAB, ZAU, ZBW, ZDC, ZDV, ZFW, ZHU, ZID, ZJX, ZKC, ZLA, ZLC, ZMA, ZME, ZMP, ZNY, ZOA, ZOB, ZSE, ZTL
FDPS_SourceSystem	This property, of type String,	FDPS1, FDPS2

DRAFT

Property Name	Description	Permissible Values
	indicates the specific instance of SFDPS that published the message. A change in the value of this property indicates that the producer has switched from one site to the other.	
FDPS_MessageType	This property, of type String, indicates the type of message	SH, HR, HA, SU, SH_AIXM, HR_AIXM, SU_AIXM, DBRTSI, DBRTAI, DBRTRI, DBRTSI_AIXM, DBRTRI_AIXM
FDPS_Recon	This property, of type Boolean, indicates whether this message was generated as the result of a data reconstitution.	TRUE – The message was generated as the result of a data reconstitution. FALSE – The message was not generated as the result of a data reconstitution. Value is set only on reconstitution messages, DBRTSI, DBRTAI, DBRTRI, DBRTSI_AIXM, DBRTRI_AIXM
FDPS_DataType	This property, of type String, indicates the type of data publication of which this message is a part.	ERADP, AirspaceAIXM
FDPS_Sensitive	This property, of type Boolean, indicates whether the flight to which this message applies is military/sensitive or not.	FALSE – The flight is neither military nor sensitive. Even though Airspace messages do not have flight data, this property must exist in order to simplify NEMS filtering rules that allow all users to receive the data.
FDPS_Authoritative	This property, of type Boolean, indicates whether the CMS message that caused this message to be published was sent from an Source Facility or ARTCC that was the authoritative or controlling Center of the flight.	TRUE – The CMS message came from the controlling center FALSE – The CMS message did not come from the controlling center

DRAFT

5.3.3 Operational Data Publication Service Messages

5.3.3.1 Traffic Count Adjustment: AK

Traffic Count Adjustment: AK	
Message Name	Traffic Count Adjustment: AK
Message Description	The Traffic Count Adjustment message is used to adjust (increment or decrement) one of the following traffic counts: • ACDD (Air Carrier Domestic Departures) • ATDD (Air Taxi Domestic Departures) • GADD (General Aviation Domestic Departures) • MIDD (Military Domestic Departures) • ACDO (Air Carrier Domestic Overs) • ATDO (Air Taxi Domestic Overs) • GADO (General Aviation Domestic Overs) • MIDO (Military Domestic Overs) • ACOD (Air Carrier Oceanic Departures) • ATOD (Air Taxi Oceanic Departures) • GAOD (General Aviation Oceanic Departures) • MIOD (Military Oceanic Departures) • ACOO (Air Carrier Oceanic Overs) • ATOO (Air Taxi Oceanic Overs) • GAOO (General Aviation Oceanic Overs) • MIOO (Military Oceanic Overs) • VFRC (Visual Flight Rules [VFR] Traffic Count)
Message Property Descriptions	Refer to Table 5-3, below
Permissible Property Values	Refer to Table 5-3, below
Message ID (if applicable)	NA
Filter Criteria	Refer to Table 5-3, below
Applicable Topic/Queue	FDPSDATA.IN
Delivery Mode	Nonpersistent
Message Body Type	Text
Estimated Frequency	2/hour (Avg), 2/sec (Peak)
Minimum/Maximum Size (bytes)	1957/2595

DRAFT

5.3.3.2 Instrument Approach Count Adjustment: AC

Instrument Approach Count Adjustment: AC	
Message Name	Instrument Approach Count Adjustment: AC
Message Description	The Instrument Approach Count message is used to adjust (increment or decrement) one of the following instrument approach counts: • AC (air carrier) • AT (air taxi) • GA (general aviation) • MI (military)
Message Property Descriptions	Refer to Table 5-3, below
Permissible Property Values	Refer to Table 5-3, below
Message ID (if applicable)	NA
Filter Criteria	Refer to Table 5-3, below
Applicable Topic/Queue	FDPSDATA.IN
Delivery Mode	Nonpersistent
Message Body Type	Text
Estimated Frequency	1/hour (Avg), 8/sec (Peak)
Minimum/Maximum Size (bytes)	1987/1989

DRAFT

5.3.3.3 Sign In Sign Out: SY

Sign In Sign Out: SY	
Message Name	Sign In Sign Out: SY
Message Description	The Sign In Sign Out Information (SY) message is sent to the ATM IPOP each time a sign in or sign out occurs, or when a reconstitution request is received.
Message Property Descriptions	Refer to Table 5-3, below
Permissible Property Values	Refer to Table 5-3, below
Message ID (if applicable)	NA
Filter Criteria	Refer to Table 5-3, below
Applicable Topic/Queue	FDPSDATA.IN
Delivery Mode	Nonpersistent
Message Body Type	Text
Estimated Frequency	10/min (Avg), 7/sec (Peak)
Minimum/Maximum Size (bytes)	2114/2399

5.3.3.4 Beacon Code Utilization: UB

Beacon Code Utilization: UB	
Message Name	Beacon Code Utilization: UB
Message Description	The Beacon Code Utilization Information message is used to provide the peak number of beacon codes used, the total number of adapted codes, and the number of code reassignments since start-up or local midnight, for an adapted period of time.
Message Property Descriptions	Refer to Table 5-3, below
Permissible Property Values	Refer to Table 5-3, below
Message ID (if applicable)	NA
Filter Criteria	Refer to Table 5-3, below
Applicable Topic/Queue	FDPSDATA.IN
Delivery Mode	Nonpersistent
Message Body Type	Text
Estimated Frequency	13/hour (Avg), 1/sec (Peak)
Minimum/Maximum Size (bytes)	2160/2160

DRAFT

5.3.3.5 Geographic Beacon Code Utilization: UG

Geographic Beacon Code Utilization: UG	
Message Name	Geographic Beacon Code Utilization: UG
Message Description	The Geographic Beacon Code Utilization message provides the total number of adapted beacon codes for each destination region as well as the peak number of beacon codes used for each destination region during the period.
Message Property Descriptions	Refer to Table 5-3, below
Permissible Property Values	Refer to Table 5-3, below
Message ID (if applicable)	NA
Filter Criteria	Refer to Table 5-3, below
Applicable Topic/Queue	FDPSDATA.IN
Delivery Mode	Nonpersistent
Message Body Type	Text
Estimated Frequency	1/day (Avg)
Minimum/Maximum Size (bytes)	2541/4241

5.3.3.6 Operational Data Properties

Table 5-3: Operational Data Properties

Property Name	Description	Permissible Values
FDPS_SourceFacility	This property, of type String, indicates the source, the ARTCC, of the CMS message that caused this message to be published.	ZAB, ZAU, ZBW, ZDC, ZDV, ZFW, ZHU, ZID, ZJX, ZKC, ZLA, ZLC, ZMA, ZME, ZMP, ZNY, ZOA, ZOB, ZSE, ZTL
FDPS_SourceSystem	This property, of type String, indicates the specific instance of SFDPS that published the message. A change in the value of this property indicates that the producer has switched from one site to the other.	FDPS1, FDPS2
FDPS_MessageType	This property, of type String, indicates the type of message	AC, AK, SY, UB, UG
FDPS_DataType	This property, of type String, indicates the type of data publication this message is part	ERODP

	of.	
FDPS_Sensitive	This property, of type Boolean, indicates whether the flight to which this message applies is military/sensitive or not.	FALSE – Even though Airspace messages do not have flight data, this property must exist in order to simplify NEMS filtering rules that allow all users to receive the data.
FDPS_Authoritative	This property, of type Boolean, indicates whether the CMS message that caused this message to be published was sent from an Source Facility or ARTCC that was the authoritative or controlling Center of the flight.	TRUE – Even though Airspace messages do not have flight data, this property must exist in order to simplify NEMS filtering rules that allow all users to receive the data.

5.3.4 General Information Publication Service Message

5.3.4.1 General Information: GH

General Information: GH	
Message Name	General Information: GH
Message Description	A general information message is used to communicate a free-form text message from one facility to one or more other facilities. The content of the message is the free-form text, contained in an inter-facility remarks field (11c).
Message Property Descriptions	Refer to Table 5-4, below
Permissible Property Values	Refer to Table 5-4, below
Message ID (if applicable)	NA
Filter Criteria	Refer to Table 5-4, below
Applicable Topic/Queue	FDPSDATA.IN
Delivery Mode	Nonpersistent
Message Body Type	Text
Estimated Frequency	1/day (Avg)
Minimum/Maximum Size (bytes)	1750/2150

DRAFT

5.3.4.2 Interim Altitude Status Information: HE

Interim Altitude Status Message: HE	
Message Name	Interim Altitude Status Message: HE
Message Description	The Interim Altitude Status Information message provides interim altitude status information on all active aircraft to a client during the initialization process.
Message Property Descriptions	Refer to Table 5-4, below
Permissible Property Values	Refer to Table 5-4, below
Message ID (if applicable)	NA
Filter Criteria	Refer to Table 5-4, below
Applicable Topic/Queue	FDPSDATA.IN
Delivery Mode	Nonpersistent
Message Body Type	Text
Estimated Frequency	3/day (Avg)
Minimum/Maximum Size (bytes)	2404/2406

5.3.4.3 Hold Status Information: HO

Hold Status Information: HO	
Message Name	Hold Status Information: HO
Message Description	The Hold Status Information message provides hold information (holding fix, and estimated fix departure time for definite-duration holds) on all active aircraft to a client during the initialization process.
Message Property Descriptions	Refer to Table 5-4, below
Permissible Property Values	Refer to Table 5-4, below
Message ID (if applicable)	NA
Filter Criteria	Refer to Table 5-4, below
Applicable Topic/Queue	FDPSDATA.IN
Delivery Mode	Nonpersistent
Message Body Type	Text
Estimated Frequency	1/day (Avg)
Minimum/Maximum Size (bytes)	1605/1629

DRAFT

5.3.4.4 ERAM Status Information: HS

ERAM Status Information: HS	
Message Name	ERAM Status Information: HS
Message Description	The ERAM Status Information message is sent when an ERAM status change occurs.
Message Property Descriptions	Refer to Table 5-4, below
Permissible Property Values	Refer to Table 5-4, below
Message ID (if applicable)	NA
Filter Criteria	Refer to Table 5-4, below
Applicable Topic/Queue	FDPSDATA.IN
Delivery Mode	Nonpersistent
Message Body Type	Text
Estimated Frequency	9/day (Avg), 2/sec (Peak)
Minimum/Maximum Size (bytes)	1601/1601

5.3.4.5 Unsuccessful Transmission Information: UI

Unsuccessful Transmission Information: UI	
Message Name	Unsuccessful Transmission Information: UI
Message Description	The Unsuccessful Information Transmission (UI) message is sent by ERAM when transmission of flight data to a remote facility is unsuccessful either due to a transmission error or because transmission of the flight data to the remote facility is inhibited.
Message Property Descriptions	Refer to Table 5-4, below
Permissible Property Values	Refer to Table 5-4, below
Message ID (if applicable)	NA
Filter Criteria	Refer to Table 5-4, below
Applicable Topic/Queue	FDPSDATA.IN
Delivery Mode	Nonpersistent
Message Body Type	Text
Estimated Frequency	1.2/min (Avg), 9/sec (Peak)
Minimum/Maximum Size (bytes)	2438/2445

DRAFT

5.3.4.6 General Information Data Properties

Table 5-4: General Information Data Properties

Property Name	Description	Permissible Values
FDPS_SourceFacility	This property, of type String, indicates the source, the ARTCC, of the CMS message that caused this message to be published.	ZAB, ZAU, ZBW, ZDC, ZDV, ZFW, ZHU, ZID, ZJX, ZKC, ZLA, ZLC, ZMA, ZME, ZMP, ZNY, ZOA, ZOB, ZSE, ZTL
FDPS_SourceSystem	This property, of type String, indicates the specific instance of SFDPS that published the message. A change in the value of this property indicates that the producer has switched from one site to the other.	FDPS1, FDPS2
FDPS_MessageType	This property, of type String, indicates the type of message	GH, HE, HO, HS, UI
FDPS_DataType	This property, of type String, indicates the type of data publication this message is part of.	ERGMP
FDPS_Sensitive	This property, of type Boolean, indicates whether the flight to which this message applies is military/sensitive or not.	TRUE – The flight is military/sensitive FALSE – The flight is neither military nor sensitive. Some of the General messages may contain a flightID. If they do then the value is set.
FDPS_Authoritative	This property, of type Boolean, indicates whether the CMS message that caused this message to be published was sent from an Source Facility or ARTCC that was the authoritative or controlling Center of the flight.	TRUE – Even though Airspace messages do not have flight data, this property must exist in order to simplify NEMS filtering rules that allow all users to receive the data.

DRAFT

5.4 Exceptions Handling

SFDPS alerts consumers to the following exceptions when there is an interruption in the flow of published data. This alert takes the form of an error or status message published to NEMS which routes the message to every consumer connected to a topic that is receiving SFDPS data. SFDPS does not assign an error code to these messages.

When the ERAM or HADDS data source is disconnected from SFDPS, a message is sent to each consumer listing the ARTCC and the time of the disconnection. The text of the message is "HADDS Disconnect."

When the data for an individual ARTCC is not available to SFDPS, a message is sent to each consumer once a minute listing the ARTCC, the time of the message, and the current state of the ARTCC which is the text "down".

Element Name [Status]	Element Definition	Type	Complex?	Format/Permissible Values	Example	Required?
Classification	This element specifies whether the message will be published externally or internally.	string	No	**Public** All messages sent to clients will have the value of Public.	**Public**	Yes
Time	This element specifies the time the message was generated.	string	No	**Time in standard XML format.** 'YYYY-MM-DDTHH:MM:SSZ'	2012-01-01T18:00:00Z	Yes
Status type	Specifies why the message was generated.	string	No	HADDS Connection HADDS Disconnect HADDS Download Initiated HADDS Download Complete HADDS Re-initialization HADDS Interface Connection ARTCC Status NEMS Status	**HADDS Disconnect**	Yes
Source	The process or component that generated the message	string	No			Yes
artcc	Indicates whether an ARTCC is providing data or not.	string	No	**Up** **Down** **Unknown**	**Down**	Yes
software	Indicates whether a software	string	No	**Up**	**Up**	Yes

DRAFT

Element Name [Status]	Element Definition	Type	Complex?	Format/Permissible Values	Example	Required?
	process is functioning or not.			**Down** **Unknown**		
process	Indicates that a process was restarted.		No			Yes
details	Additional details that may be of use to a client.	string	No	**Free form text.**		Yes
numberofMessages	If it is included in the message, this element specifies the fix and calculated time of arrival at each fix that describes the aircraft's ERAM converted route of flight. The fix and time of arrival at the fix are specified in a format that breaks down the fix and the time in separate elements: fix_68c1 and crossingTime_68c2.		Yes	Sequence of elements *fix_68c1* and *crossingTime_68c2*, specified between 3 and 326 times.		Yes

DRAFT

5.5 Data

This section describes data elements and conceptual diagrams for the messages of the four En Route data publication services supported by SFDPS Java Messaging services. The tables below show cross-references to the subsection which contains the message's detailed description.

EN ROUTE FLIGHT DATA PUBLICATION in Simple XML Format [Section 5.5.1]			
Message Name	**Message Code**	**Subsection: Data Elements**	**Subsection: Diagram**
Flight Plan Information	FH	5.5.1.2	5.5.1.3
Flight Amendment Information	AH	5.5.1.5	5.5.1.6
Converted Route Information	HX	5.5.1.8	5.5.1.9
Cancellation Information	CL	5.5.1.11	5.5.1.12
Departure Information	DH	5.5.1.14	5.5.1.15
Aircraft Iden tification Amendment Information	IH	5.5.1.17	5.5.1.18
Hold Information	HH	5.5.1.20	5.5.1.21
Progress Report Information	PH	5.5.1.23	5.5.1.24
Flight Arrival Information	HV	5.5.1.26	5.5.1.27
Flight Plan Update Information	HU	5.5.1.29	5.5.1.30
Expected Departure Time Information[2]	ET	5.5.1.32	5.5.1.33
Position Update Information	HP	5.5.1.35	5.5.1.36
Tentative Flight Plan Information	NP	5.5.1.38	5.5.1.38
Tentative Aircraft Identification Amendment Information	NI	5.5.1.41	5.5.1.42
Tentative Flight Plan Removal	NL	5.5.1.44	5.5.1.45
Tentative Flight Plan Amendment Information	NU	5.5.1.47	5.5.1.48
Batch Track Information	BATCH_TH	5.5.1.50	5.5.1.51
Drop Track Information	RH	5.5.1.53	5.5.1.54
Interim Altitude Information	LH	5.5.1.56	5.5.1.57
Automated Radar Terminal System (ARTS) Flow Control Track/Full Data Block Information[2]	HZ	5.5.1.59	5.5.1.60
Beacon Code Reassignment	BA	5.5.1.62	5.5.1.63
Beacon Code Restricted	RE	5.5.1.65	5.5.1.66
FDB Fourth Line Information	HF	5.5.1.68	5.5.1.69
Point Out Information	HT	5.5.1.71	5.5.1.72
Inbound Point Out Information	PT	5.5.1.74	5.5.1.75

[2] This message could be phased out once it becomes available from its primary source (for ET, this would be TFMS; for HZ, this would be ARTS/STARS).

DRAFT

EN ROUTE FLIGHT DATA PUBLICATION in Simple XML Format [Section 5.5.1]			
Message Name	**Message Code**	**Subsection: Data Elements**	**Subsection: Diagram**
Handoff Status	OH	5.5.1.77	5.5.1.78
Flight Plan Reconstitution	DBRTFPI	5.5.1.54	5.5.1.55

EN ROUTE FLIGHT DATA PUBLICATION in FIXM Format [Section 5.5.1]		
Message Name	**Message Code**	**Subsection: Data Elements**
Flight Plan Information	FH_FIXM	1.1.1.1
Flight Amendment Information	AH_FIXM	5.5.1.7
Converted Route Information	HX_FIXM	5.5.1.10
Cancellation Information	CL_FIXM	5.5.1.13
Departure Information	DH_FIXM	5.5.1.16
Aircraft Identification Amendment Information	IH_FIXM	5.5.1.19
Hold Information	HH_FIXM	5.5.1.22
Progress Report Information	PH_FIXM	5.5.1.25
Flight Arrival Information	HV_FIXM	5.5.1.28
Flight Plan Update Information	HU_FIXM	5.5.1.31
Expected Departure Time Information	ET_FIXM	5.5.1.34
Position Update Information	HP_FIXM	5.5.1.37
Tentative Flight Plan Information	NP_FIXM	1.1.1.1
Tentative Aircraft Identification Amendment Information	NI_FIXM	5.5.1.43
Tentative Flight Plan Removal	NL_FIXM	5.5.1.46
Tentative Flight Plan Amendment Information	NU_FIXM	5.5.1.49
Batch Track Information	BATCH_TH_FIXM	5.5.1.50
Drop Track Information	RH_FIXM	5.5.1.55
Interim Altitude Information	LH_FIXM	5.5.1.58
Automated Radar Terminal System (ARTS) Flow Control Track/Full Data Block Information	HZ_FIXM	5.5.1.61
Beacon Code Reassignment	BA_FIXM	5.5.1.64
Beacon Code Restricted	RE_FIXM	5.5.1.67
FDB Fourth Line Information	HF_FIXM	5.5.1.70
Point Out Information	HT_FIXM	5.5.1.73
Inbound Point Out Information	PT_FIXM	5.5.1.76

DRAFT

EN ROUTE FLIGHT DATA PUBLICATION in FIXM Format [Section 5.5.1]		
Message Name	**Message Code**	**Subsection: Data Elements**
Handoff Status	OH_FIXM	5.5.1.79
Flight Plan Reconstitution	DBRTFPI_FIXM	5.5.1.82

EN ROUTE AIRSPACE DATA PUBLICATION in Simple XML Format [Section 5.5.2]			
Message Name	**Message Code**	**Subsection: Data Elements**	**Subsection: Diagram**
Sector Assignment Status	SH	5.5.2.2	5.5.2.3
Route Status	HR	5.5.2.5	5.5.2.6
Special Activities Airspace (SAA)	SU	5.5.2.9	5.5.2.10
Altimeter Setting	HA	5.5.2.12	5.5.2.13
Adapted Route Status Reconstitution	DBRTRI	5.5.2.10	5.5.2.11
Altimeter Status Reconstitution	DBRTAI	5.5.2.12	5.5.2.13
Sector Assignment Reconstitution	DBRTSI	5.5.2.14	5.5.2.15

EN ROUTE AIRSPACE DATA PUBLICATION in AIXM Format [Section 5.5.2]		
Message Name	**Message Code**	**Subsection: Data Elements**
Route Status	HR_AIXM	5.5.2.7
Sector Assignment Status	SH_AIXM	5.5.2.4
Special Activities Airspace (SAA)	SU_AIXM	**Error! Reference source not ound.**
Adapted Route Status Reconstitution	DBRTRI_AIXM	5.5.2.16
Sector Assignment Reconstitution	DBRTSI_AIXM	5.5.2.21

EN ROUTE OPERATIONAL DATA PUBLICATION in Simple XML Format [Section 5.5.3]			
Message Name	**Message Code**	**Subsection: Data Elements**	**Subsection: Diagram**
Traffic Count Adjustment	AK	5.5.3.2	5.5.3.3

DRAFT

EN ROUTE OPERATIONAL DATA PUBLICATION in Simple XML Format [Section 5.5.3]			
Instrument Approach Count Adjustment	AC	5.5.3.4	5.5.3.5
Sign In Sign Out	SY	5.5.3.6	5.5.3.7
Beacon code Utilization	UB	5.5.3.8	5.5.3.9
Geographic Beacon Code Utilization	UG	5.5.3.9	5.5.3.11

EN ROUTE GENERAL MESSAGE PUBLICATION in Simple XML Format [Section 5.5.4]			
Message Name	**Message Code**	**Subsection: Data Elements**	**Subsection: Diagram**
General Information	GH	5.5.4.2	5.5.4.3
Interim Altitude Status Information	HE	5.5.4.4	5.5.4.5
Hold Status Information	HO	5.5.4.6	5.5.4.7
ERAM Status Information	HS	5.5.4.8	5.5.4.9
Unsuccessful Transmission Information	UI	5.5.4.10	5.5.4.11

DRAFT

5.5.1 Flight Data Publication Service Data Elements and Diagrams

The route element of all Flight Data Publication Service messages published in FIXM format is the element *MessageCollection*, defined in the FIXM US Extension schema file NasMessage.xsd and depicted in the diagram below.

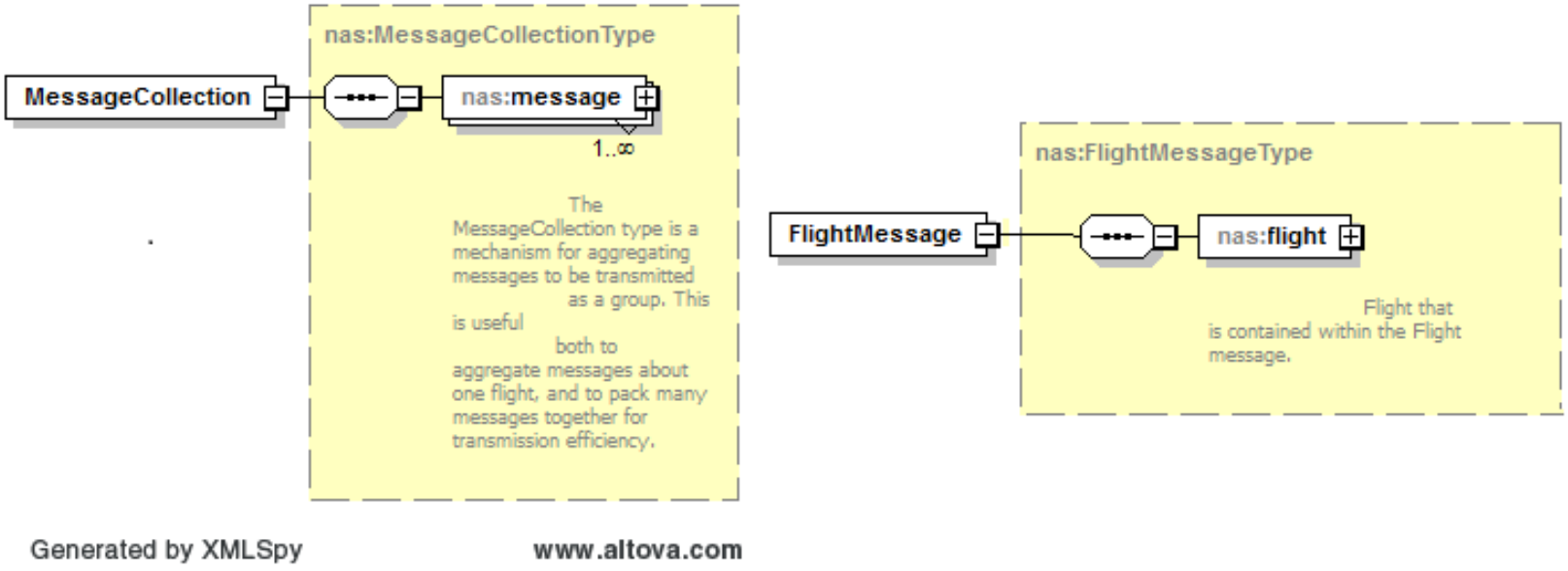

The *MessageCollection* type allows aggregating messages into batches that can be sent as a group. Only the Track Information messages are batched. All the other flight messages include only one individual message.

The FIXM XPath of the data elements included in the FIXM flight message description tables below is specified relative to the element NasFlight.

5.5.1.1 ERFDP Service: targetNamespace

The targetNamespace that applies to all messages in Simple XML format in the Flight Data Publication Service is: **us:gov:dot:faa:atm:enroute:entities:flightdata.**

5.5.1.2 SimpleXML Flight Plan, Flight Amendment, and Flight Update [FH, AH and HU] - Data Elements

Element Name [FH, AH, HU]	Element Definition	Type	Complex?	Format/Permissible Values	Example	Required?
sourceId_00e	Source identification that includes a UTC time followed by a four-digit sequence number.	string	No	**"\d{10}"** Ten digits, of which the first 6 digits represent the UTC time (*hhmmss*) and the last four-digits, represent the message sequence number in the range [0000-9999].	**2359359001**, where the first 6 digits are the UTC time (23:59:35 UTC) and the last 4 digits are sequence number of the message (9001).	Yes
sourceTime_00e1	This element consists in the time component of the previous element, sourceId_00e.	string	No	**"[0-2]\d_[0-5]\d_[0-5]\d"** Time in the format *hh_mm_ss,* where: *hh* stands for the 2-digit-hour in the range 00-23, *mm* stands for the 2-digit minutes in the range 00-59, and *ss* stands for the 2-digit seconds in the range 00-59.	**23_59_35** that represents 23:59:35 UTC	Yes
sourceSeqNo_00e2	The message sequence number component of the sourceId_00e element.	string	No	**"\d{4}"** Four-digit number in the range [0000-9999].	**9001**	Yes
flightId_02a	Aircraft ID, or flight ID (also called Call Sign).	string	No	**"\+?[A-Z][A-Z0-9]{1,6}"** One uppercase alphabetic character followed by one to six alphanumeric characters.	**AAL20**	Yes

Element Name [FH, AH, HU]	Element Definition	Type	Complex?	Format/Permissible Values	Example	Required?
computerId_02d	ERAM Computer Identification (Computer ID).	string	No	**"([0-9][A-HJ-NP-Z0-9]{2})| ([0-9]{2}[A-HJ-NP-Z0-9])"** The element includes a digit, followed by two alphanumeric characters with the exception of the letters **I** and **O**, such as *ddd, ddL, dLd, dLL*.	**020**	No
eramGufi_316a	GUFI that uniquely identifies each flight plan in the system.	string	No	**"[A-Z]{2}\d{5}[1-7]\d{2}"** This element includes 10 alphanumeric characters: -International Civil Aviation Organization (ICAO) country code (one letter); -en-route facility ID (one letter); -time in seconds of current day (five digits in the range 00000-86400); -sequence number (two digits).	**KB5980017**	No
sspId_167a	Site Specific Plan Identifier. It is assigned by Instrument Flight Procedures Automation (IFPA) to uniquely identify a flight plan in each ERAM facility.	string	No	**"\d{1,4}"** One to four-digits.	**24**	No
numberOfAircraft_03a	This element includes the number of aircraft for the flight followed optionally by the Special Aircraft Indicator.	string	No	**"\d{0,2}[A-Z]?"** The element consists of zero to two digits optionally followed by one uppercase letter to represent the Special Aircraft Indicator. The indicator can also appear on its own (without the leading digits).	**3H** The number of aircraft is 3 and the special aircraft indicator is **H** for Heavy Jet.	No
typeOfAircraft_03c	Type of aircraft.	string	No	**"[A-Z][A-Z0-9]{1,3}"** The element consists of one letter followed by one to three alphanumeric characters.	**B747**	Yes

DRAFT

Element Name [FH, AH, HU]	Element Definition	Type	Complex?	Format/Permissible Values	Example	Required?
airborneEquip_03e	Airborne equipment qualifier. It consists of one alphanumeric character.	string	No	**"[A-Z]"** The element consists of one alphanumeric character, that can have one of the following values: **A** - Transponder with no Mode C **B** - Transponder with Mode C **E** – FMS with Distance Measuring Equipment (DME)/DME and Inertial Reference Unit (IRU) position updating **G** – Global Navigation Satellite System (GNSS), including Global Positioning System (GPS) or Wide Area Augmentation System (WAAS), with en-route and terminal capability **X** – No transponder **W** - Reduced Vertical Separation Minimums (RVSM)	**E**	No
beaconCode_04a	Beacon code.	string	No	"[0-7]{4}" The element includes four octal digits (i.e. 0-7). When the last two digits of the four-digits are zero, the beacon code is a non-discrete code. A discrete code is any code not ending in 00.	Non-discrete VFR code: **2101**	No

DRAFT

Element Name [FH, AH, HU]	Element Definition	Type	Complex?	Format/Permissible Values	Example	Required?
externalBeaconCode_04b	External beacon. It contains the requested beacon code when the flight plan is inbound from an adjacent Center or an adjacent Non-U.S. Automated Facility, the requested beacon code is different from the assigned beacon code, and the aircraft is not established on the assigned beacon code. Then, if the facility is adapted to receive Field (04b), Field 04b is be transmitted.	string	No	"[0-7]{4}" It has the same format as element beaconCode_04a.	**3434**	No
trueAirSpeed_05a	True airspeed expressed in knots.	string	No	"\d{2,4}" The format is two to four-digits, in the range 01 – 3700 knots. Aircraft speed is required to be specified by using one of the three possible elements: trueAirSpeed_05a, machSpeed_05c or classifiedSpeed_05d.	**540** Aircraft true airspeed is 540 knots.	Yes, if neither machSpeed_05c nor classifiedSpeed_05d are included in the message.
machSpeed_05c	Mach speed.	string	No	**"M\d{3}"** The letter **M** followed by three digits. The maximum value is M500.	The speed 0.85 Mach is represented as **M085**.	Yes, if neither trueAirSpeed_05a nor classifiedSpeed_05dare included in the message.

DRAFT

Element Name [FH, AH, HU]	Element Definition	Type	Complex?	Format/Permissible Values	Example	Required?
classifiedSpeed_05d	Adapted classified speed. It is not printed on flight strips.	string	No	**"SC"**	This element may only include the string character **SC**.	Yes, if neither trueAirSpeed_05a nor machSpeed_05c are included in the message.
coordFix_06a	The Coordination fix represents the starting point to begin processing the flight plan route from one of the following points: the departure airport, the airfile fix or the adjacent center inbound coordination fix. For ARTS III flight plans the coordination fix Field 06 is used as the inbound coordination fix or the outbound coordination fix or, for an ARTS internal flight, it can be the departure or destination airport.	string	No	**"([A-Z0-9]{2,5})| ([A-Z0-9]{2,5}\d{6}) | (\d{4}[A-Z]?/\d{4,5}[A-Z]?)| ([A-Z0-9]{3,4}}"** This element can have one of the following formats: Two to five alphanumeric characters for a fix name. The fix name as above followed by six digits, for a fix radial distance. Four-digits followed by an optional alphabetic character, followed by a virgule ('/'), followed by four to five digits followed by an optional alphanumeric character for a lat/long. Three to four alphanumeric characters for a location identifier (LOCID).	**AB** **DFW** **KDFW** **AB200010** **SHP090015** **ATOKA300040** **3500/04000** **3500N/04000W**	Yes
coordStatusTime_07d	Coordination time that represents the starting time in hours and minutes at the coordination fix.	string	No	**"((A|D|E|P|F)[0-1][0-9][0-5][0-9) | ((A|D|E|P|F)2[0-3][0-5][0-9])"** The element includes one letter (possible values are **A**, **D, E**, **P**, or **F**) followed by four-digits that represent time as *hhmm*.	**P1020**	Yes

DRAFT

Element Name [FH, AH, HU]	Element Definition	Type	Complex?	Format/Permissible Values	Example	Required?
coordStatus_07d1	The coordStatus field is the single letter **A**, **D**, **E**, **F**, or **P**, as described for element coordStatusTime_07d.	string	No	**"(A|D|E|P|F)"**	**F**	Yes
coordTime_07d2	Starting time at the coordination fix.	dateTime	No	**dateTime**	**2014-06-20T20:17:52**	Yes
delayTime_07e	Delay time in expressed in minutes.	string	No	**"\d{3}"** Three digits.	**030**	No
assignedAlt_08a	Assigned altitude or flight level expressed in hundreds of feet. Only one of the altitude elements assignedAlt_08a, assignedAlt_08b, assignedAlt_08c, assignedAlt_08d, assignedAlt_08e, assignedAlt_08f, assignedAlt_08g, assignedAlt_08h may be included in the message.	string	No	**"(\d{2,3}) | VFR"** The format consists of either two to three digits, or the constant string **VFR**. Three digits are required for ARTS III, thus a leading zero needs to be used when necessary.	Assigned altitude of 34,000 feet: **340** Assigned altitude 9,000 feet ARTS III: **090**	No
assignedAlt_08b	Fixed value of **OTP** which indicates VFR-ON-Top. It specifies that the aircraft is flying above the clouds in VFR conditions.	string	No	**"OTP"**	Fixed value of **OTP.**	No
assignedAlt_08c	VFR-ON-Top with altitude. It represents an Instrument Flight Rules (IFR) flight operating above the clouds in VFR conditions at the specified assigned altitude.	string	No	"**OTP/\d{2,3}**" The format is the constant string **OTP**/ followed by two to three digits that represent the assigned altitude in hundreds of feet.	Aircraft flying VFR-ON-Top at 25,000 feet: **OTP/250**	No

DRAFT

Element Name [FH, AH, HU]	Element Definition	Type	Complex?	Format/Permissible Values	Example	Required?
assignedAlt_08d	The assigned block of altitudes for the flight to fly at.	string	No	**"\d{2,3}B\d{2,3}"** The format is two to three digits, followed by the letter **B**, followed by two to three digits. The leading and trailing two to three digits define the block of altitudes in hundreds of feet for the flight to fly at. The lowest altitude must be listed first.	Assigned altitude block of 8,000 feet to 14,000 feet: **80B140**	No
assignedAlt_08e	Element used for IFR flights operating above a specified altitude.	string	No	**"ABV/\d{2,3}"** The format consists of the string **ABV/** followed by two to three digits that represent the altitude in hundreds of feet above which the flight is flying.	Aircraft is flying above 60,000 feet. **ABV/600**	No
assignedAlt_08f	Assigned Altitude/FIX/Altitude element specifies the altitudes to and from a fix for the flight to fly at.	string	No	**"(\d{2,3}/[A-Z0-9]{2,5}/\d{2,3})| (\d{2,3}/[A-Z0-9]{2,5}\d{6}/\d{2,3}) | (\d{2,3}/\d{4}[A-Z]?/\d{4,5}[A-Z]?/\d{2,3})"** The altitudes are specified in hundreds of feet in a two to three digit format. The fix is specified using the same format as the coordination fix element "coordFix_06a". The fix cannot be the departure or arrival point.	**240/DAL350010/220** Flight flies at altitude 24,000 feet to the fix radial distance fix and then descend to altitude 22,000 feet.	No
assignedAlt_08g	It is used to specify that the flight is flying Visual Flight Rules (VFR). It can only have the value **VFR**.	string	No	**"VFR"**	The string **VFR.**	No
assignedAlt_08h	It is used to specify that the flight is flying VFR at a specified altitude.	string	No	**"VFR/\d{2,3}"** The format consists of the string **VFR/** followed by two to three digits that represent an altitude in hundreds of feet.	**VFR/75** The aircraft is flying VFR at 7,500 feet.	No

DRAFT

Element Name [FH, AH, HU]	Element Definition	Type	Complex?	Format/Permissible Values	Example	Required?
requestedAlt_09a	The element is used to specify requested altitude or flight level in hundreds of feet. Only one of the seven requested altitude elements (requestedAlt_09a to requestedAlt_08g) may be included in a proposed flight message.	string	No	**"\d{2,3}"** The format consists of two to three digits. ARTS III requires three characters, with a leading **0** when required (such as 090).	**340** Aircraft is requesting to fly at 34,000 feet altitude.	No
requestedAlt_09b	The element Requested Altitude format OTP represents an IFR flight requesting to operate above the clouds in VFR conditions. OTP stands for VFR-ON-Top.	string	No	**"OTP"**	The element has a fixed value of **OTP**.	No
requestedAlt_09c	The element "Requested Altitude format OTP with altitude" represents a flight requesting to operate VFR-ON-Top at the requested altitude. .	string	No	**"OTP/\d{2,3}"** The format consists of the string **OTP/** followed by two to three digits that represent the requested altitude in hundreds of feet. ERAM only sends ARTS III the requested altitude with a format of three digits (leading zeroes used when necessary, as in 090) and places a special altitude indicator (**U** if Heavy Jet) in element numberOfAircraft_03a.	**OTP/250** Flight is requesting to fly VFR-ON-Top at 25,000 feet.	No
requestedAlt_09d	Element used for an IFR flight requesting to operate above a specified altitude.	string	No	"ABV/\d{2,3}" The format consists of the string **ABV/** followed by two to three digits that represent the requested altitude in hundreds of feet.	**ABV/600**	No

DRAFT

Element Name [FH, AH, HU]	Element Definition	Type	Complex?	Format/Permissible Values	Example	Required?
requestedAlt_09e	Element used to specify a requested block of altitudes or flight levels for the flight to fly at. The altitudes are specified in hundreds of feet.	string	No	**"\d{2,3}B\d{2,3}"** The format consists of two to three digits for the lowest altitude, followed by the letter **B**, followed by two to three digits for the highest altitude.	**250B260** Flight is requesting to fly inside an altitude block between 25,000 feet and 26,000 feet.	No
requestedAlt_09f	This element is used when the aircraft is requesting to fly VFR.	string	No	**"VFR"** It can only include the fixed string "VFR." ERAM sends ARTS III the three characters and also places a special altitude indicator **V** (not a Heavy Jet) or **W** (if a Heavy Jet) in element numberOfAircraft_03a.		No
requestedAlt_09g	The element used to represent a flight requesting to fly VFR at a specified altitude.	string	No	**"VFR/\d{2,3}"** The format consists of the constant string **VFR/** followed by two to three digits that specify the requested altitude in hundreds of feet.	**VFR/35** Aircraft is requesting to fly VFR at 3,500 feet	No
flightPlanRoute_10a	It specifies the trajectory followed by the airplane from the departure point to the arrival point, based on the fixes and routes along that trajectory.	string	No	**"[A-Z0-9+/*]{2,12}_?\.[A-Z0-9+\./]*\.[A-Z0-9+/*]{2,12}_?(/\d{4})?"** The element format consists of a string that includes fixes and routes along the trajectory flown by the airplane. The fixes and routes are specified using the FIX.ROUTE.FIX format, where either element can be implied, such as FIX..FIX, or ROUTE..ROUTE.	OKC.V14S.TUL.TUL090..FYV270.FYV	Yes

DRAFT

Element Name [FH, AH, HU]	Element Definition	Type	Complex?	Format/Permissible Values	Example	Required?
departurePoint_26a	It is used to specify the point at which to start processing the flight plan route as follows: the departure airport or the airfile point.	string	No	**"([A-Z0-9]{2,5}) | ([A-Z0-9]{2,5}\d{6}) | (\d{4}[A-Z]?/\d{4,5}[A-Z]?)"** Any of the standard ways to represent a fix can be used for this element (fix name, lat/long, or fix-radial-distance), including the standard airport designators.	**AB** **DFW** **KDFW** **SHP090015** **ATOKA300040** **3500N/04000W**	Yes
destination_27a	It is used to specify the point at which to end processing the flight plan route.	string	No	**"([A-Z0-9]{2,5}) | ([A-Z0-9]{2,5}\d{6}) | (\d{4}[A-Z]?/\d{4,5}[A-Z]?)"** Any of the standard ways to represent a fix can be used for this element (fix name, lat/long, or fix-radial-distance), including the standard airport designators.	**AB** **DFW** **KDFW** **SHP090015** **ATOKA300040** **3500N/04000W**	Yes
FAV_143b0	The element specifies the FAV number containing the first fix where the route alteration occurs due to an AAR application.	string	No	**"\d{4}"** The format is four-digits.	7601	No
FAV_143b1	The element specifies the FAV number containing the second fix where the route alteration occurs due to an AAR application.	string	No	**"\d{4}"** The format is four-digits.	7601	No
FAV_143b2	The element specifies the FAV number containing the third fix where the route alteration occurs due to an AAR application.	string	No	**"\d{4}"** The format is four-digits.	7601	No

DRAFT

Element Name [FH, AH, HU]	Element Definition	Type	Complex?	Format/Permissible Values	Example	Required?
FAV_143b3	The element specifies the FAV number containing the fourth fix where the route alteration occurs due to an AAR application.	string	No	**"\d{4}"** The format is four-digits.	7601	No
ADARId_141a	If required for the flight, this element specifies the ADAR departure arrival route name.	string	No	**"\d{5}"** The format consists of five alphanumeric characters.	DA001	No
ADRId_141b	If required for the flight, the Adapted Route indicator format specifies the ADR adapted departure route name.	string	No	**"\d{5}"**	PD001	No
AARId_141c	If required for the flight, this element specifies the AAR adapted arrival route name.	string	No	**"\d{5}"**	PA001	No
ADARFld10_142a	This element contains the adapted ADAR preferential route in Field 10 format. The Preferential Route Alphanumerics are used to control the flow and separation of traffic departing and arriving at designated airports. An ADAR has the complete preferential routing from the departure airport to the arrival airport. Either this element or the element ADARNonFld10_142b may be included in the message.	string	No	**"[A-Z0-9\./]{4,44}"** Field 10 format.	SX2.PSX.V20.CRP.	No

DRAFT

Element Name [FH, AH, HU]	Element Definition	Type	Complex?	Format/Permissible Values	Example	Required?
ADARNonFld10_142b	This element contains the adapted ADAR preferential route in non-Field 10 format. If required for the flight and if the element ADARFld10_142a is not included in the message, the FH message contains this element for the ADAR adapted route. Either this element or the element ADARFld10_142a may be included in the message.	string	No	**"[A-Z0-9\./\+]{4,44}"** A "+" delimiter precedes and follows the non-Field10 elements.	+LISSE6+ +TS1 MEM270 LIT050+	No
ADRFld10_142c	Adapted ADR preferential route in Field 10 format. Either this element or the element ADRNonFld10_142d may be included in the message.	string	No	**"[A-Z0-9\./*]{4,84}"** Field 10 format.	**.ALAMO6.HENLY. J131.FUZ.J105.**	No
ADRNonFld10_142d	Adapted ADR preferential route in non-Field 10 format. Either this element or the element ADRFld10_142c may be included in the message.	string	No	**"[A-Z0-9\./\+ -]{4,84}"** A "+" delimiter precedes and follows the non-Field10 elements.	**+RV J25+CRP.LISSE6** Notice the non-Field10 substring that is enclosed between "+" characters.	No
AARFld10_142e	This element includes the AAR preferential route in Field 10 format. Either this element or the element AARNonFld10_142f may be included in the message.	string	No	**"[A-Z0-9\./]{4,97}"** Field 10 format.	**./.BLEUZ.RYTHM3 .**	No

DRAFT

Element Name [FH, AH, HU]	Element Definition	Type	Complex?	Format/Permissible Values	Example	Required?
AARNonFld10_142f	This element includes the AAR preferential route in non-Field 10 format. Either this element or the element AARFld10_142e may be included in the message.	string	No	**"[A-Z0-9\./\+]{4,97}"** A "+" delimiter precedes and follows the non-Field10 elements.	**.J25.CRP+LISSE6+** Notice the non-Field10 substring that is enclosed between "+" characters.	No
remarks_11c	Flight plan remarks text.	string	No	The string is from 1 to 400 characters in length. It has an attribute called *remarktype* with the possible values of interfacility or intrafacility.	**OAIR EVAC AMG/N0482F290 SQT/N0479F310 JOL+**	No
flightRules_908a	This element specifies the flight rules as one character as follows: **I** = IFR **V** = VFR **Y** = IFR First **Z** = VFR First	string	No	**"[IVYZ]"** If **Y** or **Z** is used, the point or points at which a change of flight rules is planned should be shown in the route.	V	No
typeOfFlight_908b	This element specifies the type of flight specified using one of the following characters: **S** = Scheduled air transport **N** = Non-scheduled air transport **G** = General Aviation **M**= Military **O** = Other flights	string	No	**"[SNGMO]"**	N	No

DRAFT

Element Name [FH, AH, HU]	Element Definition	Type	Complex?	Format/Permissible Values	Example	Required?
wakeTurbulenceCat_909c	Wake turbulence category specified using one of the following characters: **H** = Heavy **M** = Medium **L** = Light	string	No	**"[HML]"**		No
comNavApproachEquip_910a	Airborne Equipment Qualifier: Radio Communication, Navigation, and Approach AID Equipment.	string	No	**"([A-M,O-Z]{1,25}) | N"** This element has one required plus 24 optional letters. The 25 possible letters are the letters **A** through **Z** and each letter can only be used once. If the letter **N** is present, it must be the only letter present.	SCHJ See ICAO 4444 for the complete list of characters.	No

DRAFT

Element Name [FH, AH, HU]	Element Definition	Type	Complex?	Format/Permissible Values	Example	Required?
survEquip_910b	This element represents the ICAO airborne equipment qualifier.	string	No	**"[NACXPIS][D]?"** The format consists of up to two letters. The first letter must be one of the Secondary Surveillance Radar (SSR) equipment letters and the second letter, if used, must be the Automated Dependent Surveillance (ADS) capability letter **"D"**. The valid values for the first letter and their significance are: N: Nil A: Transponder Mode A C: Transponder Mode A and C X: Transponder Mode S without both aircraft ID and pressure-altitude transmission P: Transponder Mode S, with pressure-altitude transmission but aircraft ID transmission I: Transponder Mode S with aircraft ID transmission but no pressure-altitude transmission **S**: Transponder Mode S with both pressure-altitude and aircraft ID transmission **D**: ADS capability	SSR equipment as Mode S with ADS capability: SD	No

DRAFT

Element Name [FH, AH, HU]	Element Definition	Type	Complex?	Format/Permissible Values	Example	Required?
comNavApproachEquipICAO2012_910c	This element is the ICOA 2012 version of the element comNavApproachEquip_910a.	string	No	**"[A-Z][A-Z0-9]{0,63}"** The valid values are: N – No equipment is carried, or equipment is unserviceable S – Standard equipment is carried and is serviceable A – GBAS landing system B – LPV (APV with SBAS) C – LORAN C D – DME E1 – FMC WPR ACARS E2 – D-FIS ACARS E3 – PDC ACARS F – ADF G – GNSS H – HF RTF I – Inertial Navigation J1 – CPDLC ATN VDL Mode 2 J2 – CPDLC FANS 1/A HDFL J3 - CPDLC FANS 1/A VDL Mode A J4 - CPDLC FANS 1/A VDL Mode 2 J5 - CPDLC FANS 1/A SATCOM (INMARSAT) **J6** - CPDLC FANS 1/A SATCOM (MTSAT)	ADE3RV	No

DRAFT

Element Name [FH, AH, HU]	Element Definition	Type	Complex?	Format/Permissible Values	Example	Required?
comNavApproachEquipICAO2012_910c (cont.)				J7 - CPDLC FANS 1/A SATCOM (Iridium) K – MLS L – ILS M1 – ATC RTF SATCOM (INMARSAT) M2 - ATC RTF SATCOM (MTSAT) M3 – ATC RTF (Iridium) O – VOR P1-P9 – Reserved for RCP R – PBN approved T – TACAN U – UHF RTF V – VHF RTF W – RVSM approved X – MNPS approved Y – VHF with 8.33 kHz spacing capacity Z – Other equipment carried		

DRAFT

Element Name [FH, AH, HU]	Element Definition	Type	Complex?	Format/Permissible Values	Example	Required?
survEquipICAO2012_910d	This element is the ICAO 2012 equivalent of the element survEquip_910b.	string	No	**"N|A|C|(C?[BDEGHILPSUVX][BDEGHILPSUVX12]*)"** Minimum element length=1 Maximum element length=20 The valid values are the following: *N – No surveillance equipment or* equipment unserviceable A – Transponder Mode A C – Transponder Mode A and C E – Transponder – Mode S, including aircraft identification, pressure-altitude and extended squitter Automated Dependent Surveillance-Broadcast (ADS-B) capability H – Transponder – Mode S, including aircraft identification, pressure-altitude and enhanced surveillance capability I - Transponder – Mode S, including aircraft identification, but no pressure-altitude capability L – Transponder – Mode S, including aircraft identification, pressure-altitude, extended squitter (ADS-B) and enhanced surveillance capability	HB2U2V2G1	No

DRAFT

Element Name [FH, AH, HU]	Element Definition	Type	Complex?	Format/Permissible Values	Example	Required?
survEquipICAO2012_910d (cont.)				P – Transponder – Mode S, including pressure-altitude, but no aircraft identification S – Transponder – Mode S, including both pressure-altitude and aircraft identification capability X – Transponder - Mode S with neither aircraft identification nor pressure-altitude capability B1 – ADS-B with dedicated 1090 mHz ADS-B “out” capability B2 – ADS-B with dedicated 1090 mHz ADS-B “out” and “in” capability U1 - ADS-B “out” capability using UAT U2 - ADS-B “out” AND “IN” capability using UAT V1 - ADS-B “out” capability using VDL Mode 4 V2 - ADS-B “out” and “in” capability using VDL Mode 4 D1 – ADS-C with FANS 1/A capabilities G1 - ADS-C with ATN capabilities		

DRAFT

Element Name [FH, AH, HU]	Element Definition	Type	Complex?	Format/Permissible Values	Example	Required?
altAero_916c	This element contains Alternate Arrival Point(s) or Aerodrome(s), if any. More than one alternate arrival points of aerodromes may be specified.	string	No	**"([A-Z]{4} ?[A-Z]{0,4}) | ([A-Z0-9]{2,5}) | ([A-Z0-9]{2,5}\d{6}) | (\d{4}[A-Z]?/\d{4,5}[A-Z]?) | ([A-Z0-9]{3,4})"** The aerodrome is specified using the 4-letter ICAO name or ZZZZ if no ICAO location indicator has been allocated. The arrival point format has to be one of the fix formats described above (see coordFix_06a). If two or more alternatives are included, they may have any of the valid formats and they have to be separated by blanks.	EBBR EDDL	No
ICAOStoredFormat_918a	This element may only have the value zero, to indicate that none of the Other Information elements (with suffixes 918b – 918x) is present in the message.	string	No	**"0"**	0	No
EETIndicator_918b	This element specifies Significant Points or Flight Information Region (FIR) Boundary designators and accumulated estimated elapsed times to such points or boundaries, when so prescribed on the basis of regional air navigation agreements, or by the appropriate Air Traffic Service (ATS) authority. **EET** stands for Estimated Elapsed Time.	string	No	Freeform text up to a total of 3,000 characters. The element consists of one or more Significant Points with appended estimated flying time from departure in *hhmm* format with a blank separating each occurrence of Significant Point and time.	KZNY0046 HUBE0213	No

DRAFT

Element Name [FH, AH, HU]	Element Definition	Type	Complex?	Format/Permissible Values	Example	Required?
RIFIndicator_918c	This element specifies the route to a revised destination aerodrome, followed by the aerodrome location code. The revised route is subject to re-clearance in flight. **RIF** stands for Revised in Flight.	string	No	Free-form string of up to 3,000 characters. The destination aerodrome has to be specified using the four-letter ICAO location code.	DTA HEC KLAX	No
REGIndicator_918d	This element specifies Aircraft Registration (tail number), if different from the aircraft identification specified in element flightId-_02a.	string	No	Free-form string of up to 3000 characters.	N5258E	No
SELIndicator_918e	This element specifies the SELCAL code. SELCAL is a selective-calling radio system that alerts aircraft crew to incoming radio communications.	string	No	Free-form string of up to 3000 characters.	ACHA BRLM	No
OPRIndicator_918f	This field specifies the Aircraft Operator, if not obvious from the aircraft identification in flightId_02a.	string	No	Free-form string of up to 3000 characters.	UAL	No

DRAFT

Element Name [FH, AH, HU]	Element Definition	Type	Complex?	Format/Permissible Values	Example	Required?
STSIndicator_918g	This element specifies the Reason for Special Handling by ATS, such as hospital aircraft.	string	No	Free-form string of up to 3000 characters. The following are the only valid special handling indicators: **ALTRV** **ATFMX** **FFR** **FLTCK** **HAZMAT** **HEAD** **HOSP** **HUM** **MARSA** **MEDEVAC** **NONRVSM** **SAR** **STATE** **NONRNP10** **NO NRPN10** **PROTECTED** **CARGO** **CARGO FLT**	ALTRV	No
TYPIndicator_918h	Type(s) of Aircraft, preceded if necessary by number of aircraft, if ZZZZ is specified in the element numberOfAircraft_03a.	string	No	Free-form string of up to 3000 characters.	CESNA140	No

DRAFT

Element Name [FH, AH, HU]	Element Definition	Type	Complex?	Format/Permissible Values	Example	Required?
PERIndicator_918i	This element specifies the aircraft performance data.	string	No	Single valid letter specified in PAN-OPS 8168 Volume 1: **A** – Indicated airspeed (IAS) less than 169 km/h (91kt) **B** – IAS between 169 km/h (91kt) and 224 km/h (121 kt) **C** – IAS between 224 km/h (121 kt) and 261 km/h (141 kt) **D** – IAS between 261 km/h (141 kt) and 307 km/h (166 kt) **E** - IAS between 307 km/h (166 kt) and 391 km/h (211 kt) **H** - Helicopters	C	No
COMIndicator_918j	This element contains Communication Equipment Data. It is used for additional Communication Equipment on board not specified in the flightPlanRoute_10a element.	string	No	Free-form string of up to 3000 characters.	HF ONLY TCAS	No
DATIndicator_918k	This element specifies data related to data link capability.	string	No	Free-form string of up to 3000 characters. Valid values are: **S** – satellite data link **H** – HF data link **V** – VHF data link **M** – SSR Mode S data link One or more of the valid letters may be specified in this element.	SV	No

DRAFT

Element Name [FH, AH, HU]	Element Definition	Type	Complex?	Format/Permissible Values	Example	Required?
NAVIndicator_918l	This element contains Navigation Equipment Data. It is used for additional Navigation Equipment not specified in the flightPlanRoute_10a element.	string	No	Free-form string of up to 3000 characters.	ADF ONLY	No
DEPIndicator_918m	This element contains the name of the Departure Aerodrome.	string	No	Free-form string of up to 3000 characters.	NORTON FIELD	No
DESTIndicator_918n	This element includes the name of the destination aerodrome.	string	No	Free-form string of up to 3000 characters.	MILLSPAW FARM	No
ALTNIndicator_918o	This element includes the name of the alternate destination aerodrome(s).	string	No	Free-form string of up to 3000 characters.	MILLSPAW FARM	No
RALTIndicator_918p	This element contains the en-route alternate aerodrome(s).	string	No	Free-form string of up to 3000 characters.	JP RANCH	No
CODEIndicator_918q	This element specifies the aircraft Controller-Pilot Data Link Communications (CPDLC) address.	string	No	Free-form string of up to 3000 characters.	**45FA16**	No
RACEIndicator_918r	This element specifies the requested altitude and speed en route.	string	No	Free-form string of up to 3000 characters.	**KRAFT/M080F380**	No
SURIndicator_918s	This element specifies the surveillance applications or capabilities not specified in localIntendedRoute_10b.	string	No	Free-form string of up to 3000 characters.	**282B**	No
DLEIndicator_918t	This element specifies significant en route delay or holding point(s), followed by length of delay.	string	No	Free-form string of up to 3000 characters. The length of delay is specified in the format *hhmm*.	**MDG0030**	No

DRAFT

Element Name [FH, AH, HU]	Element Definition	Type	Complex?	Format/Permissible Values	Example	Required?
TALTIndicator_918u	This element specifies the take-off alternate aerodrome.	string	No	Free-form string of up to 3000 characters. Valid formats include aerodrome name or any of the fix formats (i.e., lat/long, fix-radial-distance, or name).	KRAFT FARM	No
DOFIndicator_918v	This element specifies the date of flight.	string	No	Six-digit date in the format *yymmdd*.	140617	No
ORGNIndicator_918w	This element specifies the originator's eight-letter AFTN address or other appropriate contact details, in cases where the originator of the flight plan may not be readily identified, as required by the appropriate ATS authority.	string	No	Eight-letter character string.	**LEBBYNYX**	No

DRAFT

Element Name [FH, AH, HU]	Element Definition	Type	Complex?	Format/Permissible Values	Example	Required?
PBNIndicator_918x	This element specifies the Area Navigation (RNAV) or Required Navigation Performance (RNP) capability. PBN stands for Performance Based Navigation.	string	No	Up to eight two-character specifications may be included, for a total of 16 characters. RNAV and RNP capabilities are two-characters each, as follows. **RNAV** specifications: A1 RNAV10 (RNP 10) B1 RNAV 5 all permitted sensors B2 RNAV 5 GNSS B3 RNAV 5 DME/DME B4 RNAV 5 VOR/DME B5 RNAV 5 INS or IRS B6 RNAV 5 LORANC C1 RNAV 2 all permitted sensors C2 RNAV 2 GNSS C3 RNAV 2 DME/DME C4 RNAV 2 DME/DME/IRU D1 RNAV 1 all permitted sensors D2 RNAV 1 GNSS D3 RNAV 1 DME/DME D4 RNAV 1 DME/DME/IRU	B1O1	No
				RNP specifications: L1 RNP 4 O1 Basic RNP 1 all permitted sensors O2 Basic RNP 1 GNSS O3 Basic RNP 1 DME/DME O4 Basic RNP 1 DME/DME/IRU S1 RNP APCH S2 RNP APCH with BAR-VNAV T1 RNP AR APCH with RF (special authorization required) T2 RNP AR APCH without RF (special authorization required)		

DRAFT

Element Name [FH, AH, HU]	Element Definition	Type	Complex?	Format/Permissible Values	Example	Required?
RNVArrival_925a	This element specifies the RNAV accuracy value for the arrival phase of the flight expressed in hundredths (.01) nm.	string	No	**"\d{4}"** The allowable range is 0001-9999. If the value is 0 then the field is not included.	Accuracy of 0.3 nm: 0030	No
RNVEnroute_925b	This element specifies the RNAV accuracy value for the en route phase of the flight expressed in hundredths (.01) nm.	string	No	**"\d{4}"** The allowable range is 0001-9999. If the value is 0 then the field is not included.	Accuracy of 0.1 nm: 0010	No
RNVOceanic_925c	This element specifies the RNAV accuracy value for the oceanic phase of the flight expressed in hundredths (.01) nm.	string	No	**"\d{4}"** The allowable range is 0001-9999. If the value is 0 then the field is not included.	Accuracy of 0.1 nm: 0010	No
RNVDeparture_925d	This element specifies the RNAV accuracy value for the departure phase of the flight expressed in hundredths (.01) nm.	string	No	**"\d{4}"** The allowable range is 0001-9999. If the value is 0 then the field is not included.	Accuracy of 0.1 nm: 0010	No
RNVSpare1_925e	This is a spare element.	string	No	**"\d{4}"**		No
RNVSpare2_925f	This is a spare element.	string	No	**"\d{4}"**		No
RNPArrival_925g	This element specifies the RNPaccuracy value for the arrival phase of the flight expressed in hundredths (.01) nm.	string	No	**"\d{4}"** The allowable range is 0001-9999. If the value is 0 then the field is not included.	Accuracy of 0.3 nm: 0030	No

DRAFT

Element Name [FH, AH, HU]	Element Definition	Type	Complex?	Format/Permissible Values	Example	Required?
RNPEnroute_925h	This element specifies the RN) accuracy value for the en route phase of the flight expressed in hundredths (.01) nm.	string	No	**"\d{4}"** The allowable range is 0001-9999. If the value is 0 then the field is not included.	Accuracy of 0.3 nm: 0030	No
RNPOceanic_925i	This element specifies the RN) accuracy value for the oceanic phase of the flight expressed in hundredths (.01) nm.	string	No	**"\d{4}"** The allowable range is 0001-9999. If the value is 0 then the field is not included.	Accuracy of 0.3 nm: 0030	No
RNPDeparture_925j	This element specifies the RN) accuracy value for the departure phase of the flight expressed in hundredths (.01) nm.	string	No	**"\d{4}"** The allowable range is 0001-9999. If the value is 0 then the field is not included.	Accuracy of 0.3 nm: 0030	No
RNPSpare1_925k	This is a spare element.	string	No	**"\d{4}"**		No
RNPSpare2_925l	This is a spare element.	string	No	**"\d{4}"**		No

DRAFT

Element Name [FH, AH, HU]	Element Definition	Type	Complex?	Format/Permissible Values	Example	Required?
ICAO1stAdaptedField18_999a ICAO1stAdaptedField18_999b ICAO1stAdaptedField18_999c ICAO1stAdaptedField18_999d ICAO1stAdaptedField18_999e ICAO1stAdaptedField18_999f ICAO1stAdaptedField18_999g ICAO1stAdaptedField18_999h ICAO1stAdaptedField18_999i ICAO1stAdaptedField18_999j ICAO1stAdaptedField18_999k ICAO1stAdaptedField18_999l ICAO1stAdaptedField18_999m ICAO1stAdaptedField18_999n ICAO1stAdaptedField18_999o ICAO1stAdaptedField18_999p ICAO1stAdaptedField18_999q ICAO1stAdaptedField18_999r ICAO1stAdaptedField18_999s ICAO1stAdaptedField18_999t ICAO1stAdaptedField18_999u	Elements having the suffix of _999a through _999y contain the data that is that is present for the optionally adapted element 918 indicators that are transmitted to CMS, when applicable, using a Field Reference Number of 999, with elements a through y. They are formatted as free-form text.	string	No	Free-form string of up to 3,000 characters.		No

DRAFT

Element Name [FH, AH, HU]	Element Definition	Type	Complex?	Format/Permissible Values	Example	Required?
localIntendedRoute_10b	The Local Intended Route element contains the flight plan route that is coordinated to penetrated facilities. It consists of the flight plan route with any expected-to-be-applied-by-the-controlling-center ADRs, ADARs or AARs already applied. It is intended for the clients that wish to know the expected state of the flight plan when the current facility releases control of the flight. Element localIntendedRoute_10b contains the filed route (field 10a) merged with any locally applicable adapted routes (preferential routes, transition fixes and A-line fixes). Optional Field 10b is sent to ATM-IPOP, when Field 10b is not the same as Field 10a.	string	No	**"[A-Z0-9+/*]{2,12}_?\.[A-Z0-9+\./]*\.[A-Z0-9+/*]{2,12}_?(/\d{4})?"** Minimum length = 3 Maximum length = 1000		No

DRAFT

Element Name [FH, AH, HU]	Element Definition	Type	Complex?	Format/Permissible Values	Example	Required?
ATCIntendedRoute_10c	The ATC Intended Route element contains the current cleared flight plan route with any unacknowledged auto routes already applied. The ATC Intended Route includes to-be-applied AARs that are not to be notified in the current center. It is intended for clients that wish to know the currently expected route of the flight across contiguous ERAM airspace. Field 10c contains the filed route (field 10a) merged with any adapted routes (preferential routes, transition fixes and A-line fixes). Optional Field 10c is sent to ATM-IPOP, when parameter Merged ATC Intended Route Switch (MARS) is ON and if either one of the following is true: If Field 10b exists and Field 10c is not the same as Field 10b If Field 10b does not exist and Field 10c is not the same as Field 10a.	string	No	"[A-Z0-9+/*]{2,12}_?\.[A-Z0-9+\./]*\.[A-Z0-9+/*]{2,12}_?(/\d{4})?" Minimum length = 3 Maximum length = 1000		No

DRAFT

5.5.1.3 Flight Plan, Flight Amendment, and Flight Update [FH, AH and HU]: Diagram

The conceptual diagram for Flight Plan [FH], Flight Plan Amendment [AH] and Fight Plan Update [HU] are identical. Due to the size of the diagram, it has been separated into six successive figures for legibility.

DRAFT

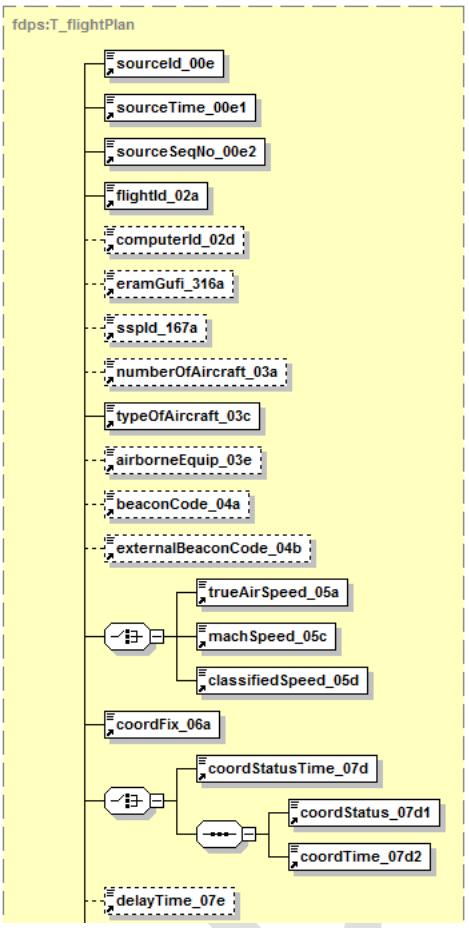
fdps:T_flightPlan
sourceId_00e
sourceTime_00e1
sourceSeqNo_00e2
flightId_02a
computerId_02d
eramGufi_316a
sspId_167a
numberOfAircraft_03a
typeOfAircraft_03c
airborneEquip_03e
beaconCode_04a
externalBeaconCode_04b
trueAirSpeed_05a
machSpeed_05c
classifiedSpeed_05d
coordFix_06a
coordStatusTime_07d
coordStatus_07d1
coordTime_07d2
delayTime_07e

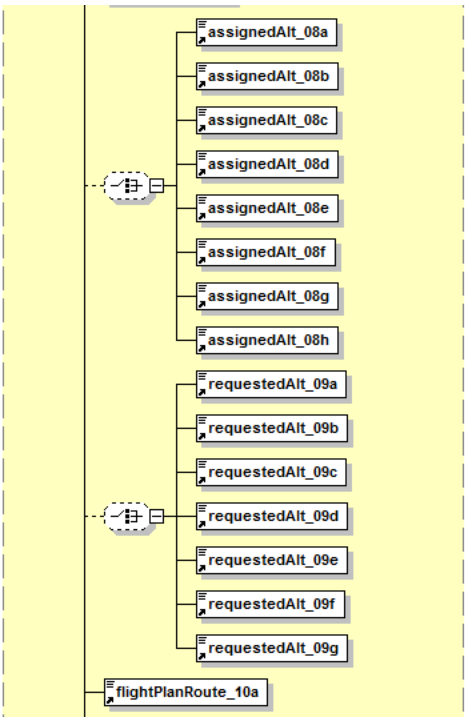
assignedAlt_08a
assignedAlt_08b
assignedAlt_08c
assignedAlt_08d
assignedAlt_08e
assignedAlt_08f
assignedAlt_08g
assignedAlt_08h
requestedAlt_09a
requestedAlt_09b
requestedAlt_09c
requestedAlt_09d
requestedAlt_09e
requestedAlt_09f
requestedAlt_09g
flightPlanRoute_10a

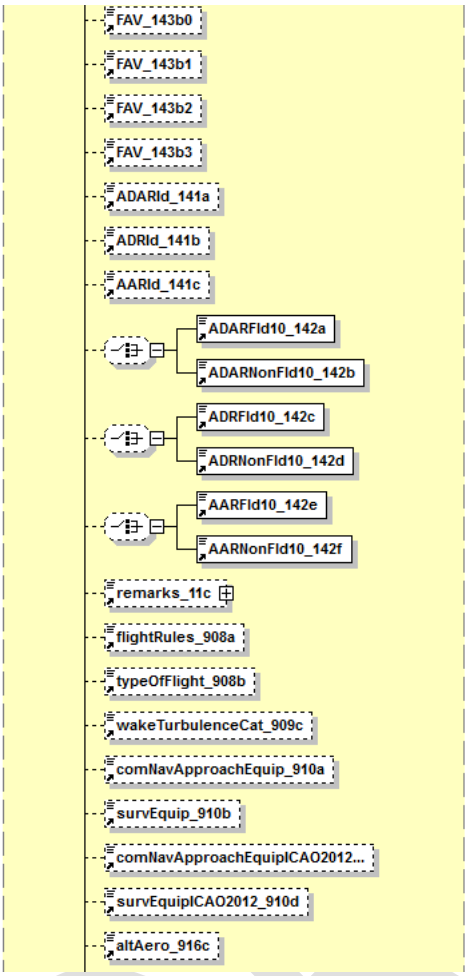

Figure 5-1: FH Data Diagram [parts 1,2, and 3]

DRAFT

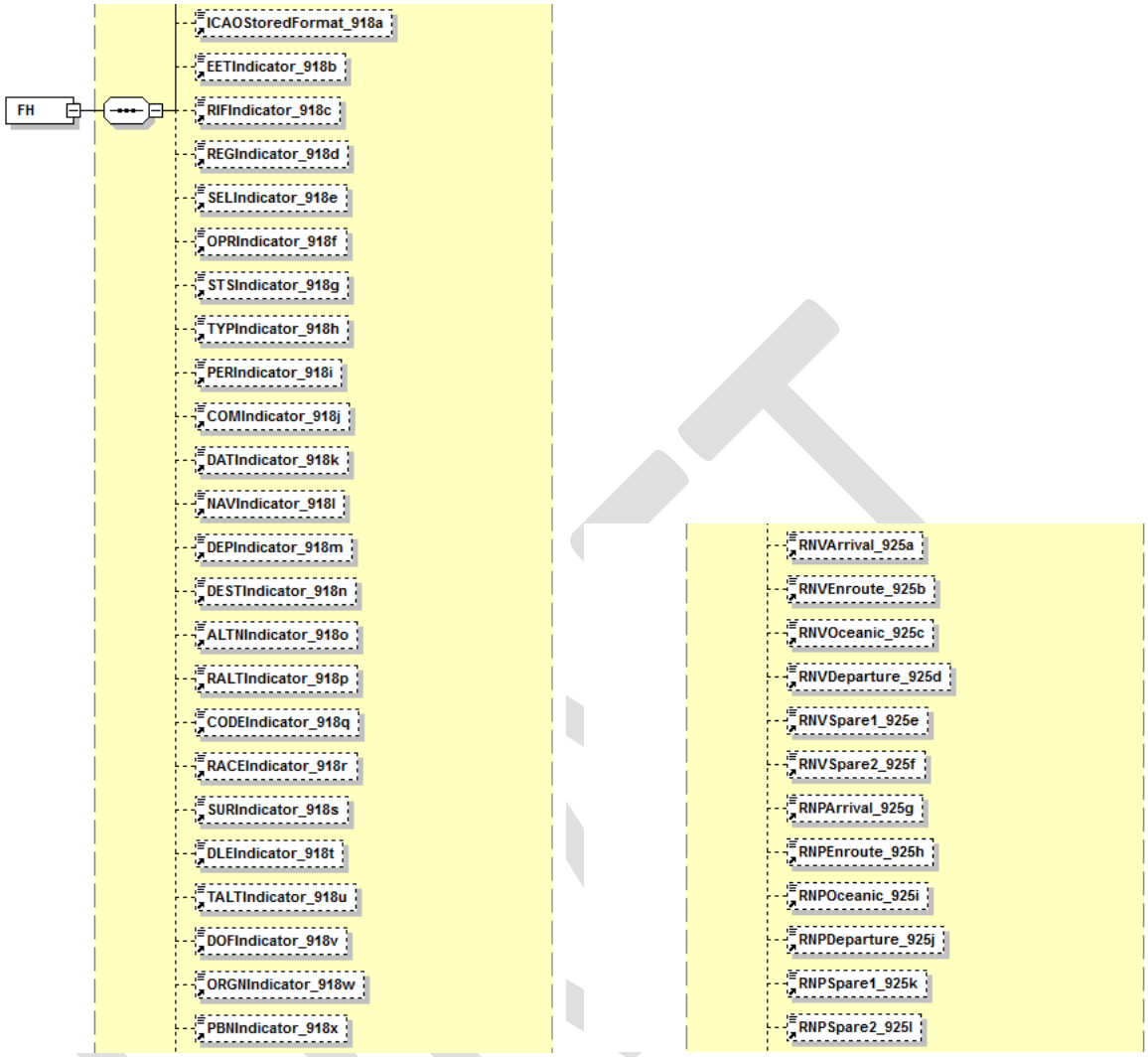
FH
ICAOStoredFormat_918a
EETIndicator_918b
RIFIndicator_918c
REGIndicator_918d
SELIndicator_918e
OPRIndicator_918f
STSIndicator_918g
TYPIndicator_918h
PERIndicator_918i
COMIndicator_918j
DATIndicator_918k
NAVIndicator_918l
DEPIndicator_918m
DESTIndicator_918n
ALTNIndicator_918o
RALTIndicator_918p
CODEIndicator_918q
RACEIndicator_918r
SURIndicator_918s
DLEIndicator_918t
TALTIndicator_918u
DOFIndicator_918v
ORGNIndicator_918w
PBNIndicator_918x
RNVArrival_925a
RNVEnroute_925b
RNVOceanic_925c
RNVDeparture_925d
RNVSpare1_925e
RNVSpare2_925f
RNPArrival_925g
RNPEnroute_925h
RNPOceanic_925i
RNPDeparture_925j
RNPSpare1_925k
RNPSpare2_925l

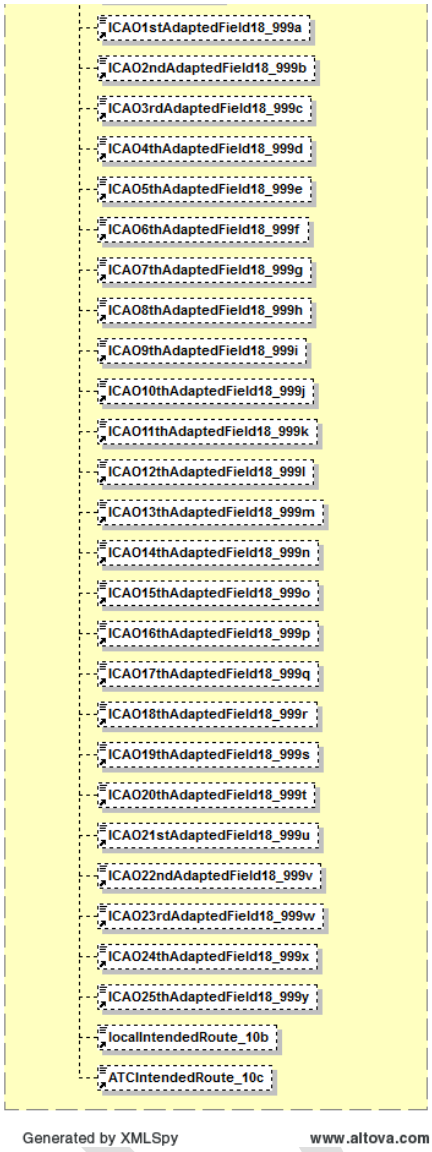

Figure 5-2: FH Diagram [parts 4, 5, and 6]

DRAFT

5.5.1.4 FIXM Flight Plan, Flight Amendment, and Flight Update [FH_FIXM, AH_FIXM and HU_FIXM] - Data Elements

The following elements of the FH message in Simple XML format are not used in the FIXM format of the message:

- sourceId_00e
- sourceTime_00e1
- sourceSeqNo_00e2
- eramGufi_316a
- eramGufi_316aNum
- eramGufi_316Adt
- coordStatusTime_07d
- comNavApproachEquip_910a
- survEquip_910b
- ICAOStoredFormat_918a
- RACEIndicator_918r
- DOFIndicator_918v

Name [FH_FIXM, AH_FIXM, HU_FIXM]	Name in SimpleSchema [FH,AH,HU]	Definition	Type	Complex?	Format/Permissible Values	Example	Required?
flight/flightIdentification/@aircraftIdentification	flightId_02a	Name used by Air Traffic Services units to identify and communicate with an aircraft.	fb:FlightIdentifierType	No	"[A-Z0-9]{7}"	AAL20	Yes
flight/@system	propSourceSystem	This attribute indicates which SFDPS system generated the message.	fb:ProvenanceSystemType	No	xs:string maxLength=128	FDPS1	Yes

Name [FH_FIXM, AH_FIXM, HU_FIXM]	Name in SimpleSchema [FH,AH,HU]	Definition	Type	Complex?	Format/Permissible Values	Example	Required?
flight/@timestamp	propRcvdTime	This attribute conatins the time at which the message was received by SFDPS.	ff:TimeType	No	xs:dateTime	2015-12-18T22:19:02.028Z	Yes
flight/@centre	center	This attribute specifies the code of the ARTCC (or FIR) that produced the data.	fb:ProvenanceCentreType	No	xs:string	ZAU	Yes
flight/arrival/runwayPositionAndTime/runwayTime/[estimated|actual]/@time	arrivalTime	This attribute specifies the proposed or the actual time of arrival at destination, set according to the flight state.	ff:TimeType	No	xs:dateTime	2014-06-20T20:17:52	Yes
flight/departure/runwayPositionAndTime/runwayTime/[actual|estimated]/@time	departureTime	This element specifies the proposed or actual departure time, set according to the flight state.	ff:TimeType	No	xs:dateTime	2014-06-20T20:17:52	Yes
flight/flightStatus/@fdpsFlightStatus	flightState	This attribute contains the current status of the flight as specified by SFDPS.	nas:SfdpsFlightStatusType	Yes	xs:string "PROPOSED|ACTIVE|COMPLETED|CANCELLED|DROPPED"	ACTIVE	Yes
flight/supplementalData/additionalFlightInformation/nameValue/@name flight/supplementalData/additionalFlightInformation/nameValue/@value	fdpsGufi	The name value pair specifies the SFDPS GUFI, an identifier on every message that positively identifies what flight the message is for.	fb:FreeTextType	No	xs:string @name: "FDPS_GUFI" @value: "us\.fdps\.\d{4}-\d{2}-\d{2}T\d{2}:\d{2}:\d{2}Z\.[A-Za-z0-9/]+"	name="FDPS_GUFI" value="us.fdps.2015-12-18T16:59:10Z.000/14/100"/>	Yes
flight/flightPlan/@identifier	eramGufi_316a	This attribute specifies the unique flight plan	fb:FreeTextType	No	xs:string "[A-Z]{2}\d{5}[1-7]\d{2}"	"KU68378100"	No

DRAFT

Name [FH_FIXM, AH_FIXM, HU_FIXM]	Name in SimpleSchema [FH,AH,HU]	Definition	Type	Complex?	Format/Permissible Values	Example	Required?
	FPId	identifier.					
flight/gufi	uuidGufi	This element contains a reference that uniquely identifies a flight and that is independent of any particular system. This reference conforms to the Universal Unique Identifier standard.	fb:GloballyFlightIdentifierType		xs:string "[0-9a-fA-F]{8}\-[0-9a-fA-F]{4}\-4[0-9a-fA-F]{3}\-[89aAbB][0-9a-fA-F]{3}\-[0-9a-fA-F]{12}"	4aaf92be-ac0a-4dba-998f-9e56f5d450b6	Yes
flight/supplementalData/additionalFlightInformation/nameValue/@name flight/supplementalData/additionalFlightInformation/nameValue/@value	FDPS_SequenceNo	Sequence number assigned by SFDPS to each message it receives from HADDS. The attribute *name* includes the constant string "MSG_SEQ_NO", and the attribute *value* contains the sequence number value.	fb:FreeTextType	No	”MSG_SEQ_NO” xs:nonNegativeInteger xs:maxInclusive value="999999999"	name="MSG_SEQ_NO" value="6860416"	Yes
flight/flightIdentification/@siteSpecificPlanId	sspId_167a	Site Specific Plan Identifier. It is assigned by Instrument Flight Procedures Automation (IFPA) to uniquely identify a flight plan in each ERAM facility.	fb:CountType	No	**"\d{1,4}"** One to four-digits.	**24**	No
flight/aircraftDescription/@aircraftQuantity	numberOfAircraft_03a	This element includes the number of aircraft for the flight.	fb:countType	No	**"\d{0,2}"** The element consists of zero to two digits.	**3**	No
flight/aircraftDescription/@tfmsSpecialAircraftQualifier	numberOfAircraft_03a-Special Aircraft	This element includes the Special Aircraft Indicator. It indicates the flight is a	nas:NasSpecialAircraftQualifierType	No	**“HEAVY_JET|TCAS|B757|HEAVY_JET_AND_TCAS”** **“HEAVY_JET”** = Capable of	**HEAVY_JET**	No

Name [FH_FIXM, AH_FIXM, HU_FIXM]	Name in SimpleSchema [FH,AH,HU]	Definition	Type	Complex?	Format/Permissible Values	Example	Required?
	Indicator	heavy jet, B757 or, if not present, a large jet and if the flight is either equipped or not with TCAS. This indicator is used for output purposes such as strip printing and message transfers to other facilities such as Automated Radar Terminal System (ARTS). NOTE TFMS Special Aircraft Qualifier is a bad fit to Special Aircraft Indicator but no other fields seem to fit.			takeoff weights of 300,000 pounds or more **"TCAS"** = Traffic collision avoidance system or traffic alert and collision avoidance system **"B757"** = Controllers are required to apply the special wake turbulence separation criteria for the Boeing 757. **"HEAVY_JET_AND_TCAS"** = Capable of takeoff weights of 300,000 pounds or more and traffic collision avoidance system.		
flight/aircraftDescription/aircraftType/icaoModelIdentifier	typeOfAircraft_03c	The ICAO code of the aircraft type.	fb:IcaoAircraftIdentifierType	No	**"[A-Z][A-Z0-9]{1,3}"** The element consists of one letter followed by one to three alphanumeric characters.	**B747**	Yes
flight/aircraftDescription/@equipmentQualifier	airborneEquip_03e	Airborne equipment qualifier. A value assigned to the aircraft, based on its navigational equipment, whether or not it has a transponder, and if it has a transponder, whether the transponder supports Mode C.	nas:NasAirborneEquipmentQualifierType	No	**" [ABCDGHILMNPSTUVWXYZ]"** The element consists of one alphanumeric character, that can have one of the following values: -"X"= No RVSM, No DME, No transponder -"T"= No RVSM, No DME, Transponder with no mode C -"U"= No RVSM, No DME: Transponder with mode C -"D"= DME: No transponder -"B"= DME: Transponder with no mode C -"A"= DME: Transponder with mode	**E**	No

DRAFT

Name [FH_FIXM, AH_FIXM, HU_FIXM]	Name in SimpleSchema [FH,AH,HU]	Definition	Type	Complex?	Format/Permissible Values	Example	Required?
					-“M”= TACAN ONLY: No transponder -“N”= TACAN ONLY: Transponder with no mode C -“P”= TACAN ONLY: Transponder with mode C -“C”= “Y”= LORAN,VORDME,INS,RNAV: No transponder -“I”= LORAN,VORDME,INSRNAV: Transponder with mode C -“H”= RVSM, Failed transponder or Failed Mode C capability -“S=ADVANCED RNAV, TRANSPONDER, MODE C: FMS with DMEDME position updating -“G”= ADVANCED RNAV, TRANSPONDER, MODE C: Global Navigation Satellite System (GNSS), including GPS or Wide Area Augmentation System (WAAS), with enroute and terminal capability -“V”= ADVANCED RNAV, TRANSPONDER, MODE C: Required Navigational Performance (RNP). The aircraft meets the RNP type prescribed for the route segments, routes and/or area concerned. -“Z”= REDUCED VERTICAL SEPARATION MINIMUM (RVSM): E with RVSM -“L”= REDUCED VERTICAL SEPARATION MINIMUM (RVSM): G with RVSM -“W”= REDUCED VERTICAL		

DRAFT

Name [FH_FIXM, AH_FIXM, HU_FIXM]	Name in SimpleSchema [FH,AH,HU]	Definition	Type	Complex?	Format/Permissible Values	Example	Required?
					SEPARATION MINIMUM (RVSM): RVSM		
flight/enRoute/beaconCodeAssignment/currentBeaconCode	beaconCode_04a	Current assigned beacon code.	fb:BeaconCodeType	No	"[0-7]{4}" The element includes four octal digits (i.e. 0-7). When the last two digits of the four-digits are zero, the beacon code is a non-discrete code. A discrete code is any code not ending in 00.	Non-discrete VFR code: **2101**	No
flight/enRoute/beaconCodeAssignment/reassignedBeaconCode	externalBeaconCode_04b	Reassigned beacon code. Identifies the downstream unit that assigned the next beacon code, in the case the beacon code was already in use by another flight at the downstream unit.	fb:BeaconCodeType	No	"[0-7]{4}" It has the same format as currentBeaconCode.	**3434**	No
flight/requestedAirspeed/nasAirspeed flight/requestedAirspeed/@uom	trueAirSpeed_05a machSpeed_05c	The aircraft speed expressed in either true airspeed or mach.	ff: TrueAirSpeedOrMachType @uom: ff:AirspeedMeasureType	No	**"xs:double"** @uom: **"KILOMETERS_PER_HOUR|KNOTS|MACH"** *nasAirspeed* is required if *requestedAirspeed/classifed* is not included in the message.	nasAirspeed: **540** uom: **KNOTS**	No
flight/requestedAirspeed/classified	classifiedSpeed_05d	Classified Speed Indicator. It indicates that the speed for this flight is classified and is not to be recorded.	nas:ClassifiedSpeedIndicatorType	No	**"CLASSIFIED"** *classified* is required if *requestedAirspeed/nasAirspeed* not included in the message.	**CLASSIFIED**	No
flight/coordination/coordinationFix/@fix	coordFix_06a	The fix to be used in conjunction with the	*fb:SignificantPointType* (abstract type)	Yes	*-fb:FixPointType* **"[A-Z0-9]{2,5}"**	**KBOS**	Yes

DRAFT

Name [FH_FIXM, AH_FIXM, HU_FIXM]	Name in SimpleSchema [FH,AH,HU]	Definition	Type	Complex?	Format/Permissible Values	Example	Required?
		CoordinationTime so processing for this flight can be synchronized for the next sector/facility. It coordinates the flight plan with the aircraft position.	*fb:FixPointType/ ff:GeographicalLocationType/ fb:RelativePointType*		- *ff:GeographicalLocationType* List of two **xs:double** (latitude followed by longitude) - *fb:RelativePointType* - fix: **"[A-Z0-9]{2,5}"** - distance: *ff:DistanceType* **xs:double** - radial: *fb:DirectionType* **xs:double** minInclusive = 0 maxInclusive =360		
flight/coordination/@coordinationTimeHandling	coordStatus_07d1	The indicator for the type of Coordination Time.	nas:CoordinationTimeType	No	**"(P|D|E|A)"** **"P"** = Proposed flight plan. **"D"** = Aircraft has departed from the departure airport. **"E"** = Active aircraft. **"A"** = Aircraft arrived at the destination airport.	**P**	Yes
flight/coordination/@coordinationTime	coordTime_07d2	Coordination Time: the time to be used in conjunction with the Coordination Fix so processing for this flight can be synchronized for the next sector/facility.	ff:TimeType	No	**xs:dateTime**	**2015-06-20T20:17:52**	Yes
flight/coordination/@delayTimeToAbsorb	delayTime_07e	Delay time to absorb: indicates the amount of time that needs to be absorbed during the flight. It is corrective action for meeting the goal of	ff:DurationTime	No	**xs:duration**	**PT30M**	No

DRAFT

Name [FH_FIXM, AH_FIXM, HU_FIXM]	Name in SimpleSchema [FH,AH,HU]	Definition	Type	Complex?	Format/Permissible Values	Example	Required?
		Estimated Departure Clearance Time (EDCT), when the flight is already active and needs to arrive later than originally planned.					
flight/assignedAltitude/simple flight/assignedAltitude/simple/@uom	assignedAlt_08a	Simple altitude: single measurement above reference point. It represents the only NAS altitude that maps directly to the core ICAO altitude types. Only one of the altitude elements *simple*, *vfrOnTop*, *vfrOnTopPlus*, *block*, *above*, *altFixAlt*, *vfr*, *vfrPlus* may be included in the message.	nas:SimpleAltitudeType @uom: ff:AltitudeMeasureType	Yes	**"xs:double"** *@uom*: "**FEET|METERS**"	Assigned altitude of 34,000 feet: **34000** *Uom*: **FEET**	No
flight/assignedAltitude/vfrOnTop	assignedAlt_08b	The presence of this element indicates VFR-ON-Top. It specifies that the aircraft is flying above the clouds in VFR conditions. Only one of the altitude elements *simple*, *vfrOnTop*, *vfrOnTopPlus*, *block*, *above*, *altFixAlt*, *vfr*, *vfrPlus* may be included in the message.	Nas:VfrOnTopAltitudeType	Yes	Empty element.		No
flight/assignedAltitude/vfrOnTopPlus flight/assignedAltitude/vfrOnTopPlus/@uom	assignedAlt_08c	VFR-ON-Top with altitude. It represents an Instrument Flight Rules (IFR) flight operating above the clouds in VFR	nas:VfrOnTopPlusAltitudeType @uom: ff:AltitudeMeasureTyp	No	**"xs:double"** @uom: **"FEET|METRES"**	Aircraft flying VFR-ON-Top at 25,000 feet: **25000** *uom*: **FEET**	No

DRAFT

Name [FH_FIXM, AH_FIXM, HU_FIXM]	Name in SimpleSchema [FH,AH,HU]	Definition	Type	Complex?	Format/Permissible Values	Example	Required?
		conditions at the specified assigned altitude. Only one of the altitude elements *simple*, *vfrOnTop*, *vfrOnTopPlus*, *block*, *above*, *altFixAlt*, *vfr*, *vfrPlus* may be included in the message.	e				
flight/assignedAltitude/block/above flight/assignedAltitude/block/above/@uom	assignedAlt_08d	The bottom level of the assigned block of altitudes for the flight to fly at. Only one of the altitude elements *simple*, *vfrOnTop*, *vfrOnTopPlus*, *block*, *above*, *altFixAlt*, *vfr*, *vfrPlus* may be included in the message.	ff:AltitudeType @uom: ff:AltitudeMeasureType	Yes	**"xs:double"** @uom: **"FEET|METRES"**	*above:* **8000** *uom:* **FEET**	No
flight/assignedAltitude/block/below flight/assignedAltitude/block/below/@uom	assignedAlt_08d	The top level of the assigned block of altitudes for the flight to fly at. Only one of the altitude elements *simple*, *vfrOnTop*, *vfrOnTopPlus*, *block*, *above*, *altFixAlt*, *vfr*, *vfrPlus* may be included in the message.	ff:AltitudeType @uom: ff:AltitudeMeasureType	Yes	**"xs:double"** @uom: **"FEET|METRES"**	*below:* **14000** *uom:* **FEET**	No
flight/assignedAltitude/above flight/assignedAltitude/above/@uom	assignedAlt_08e	Element used for IFR flights operating above a specified altitude. Only one of the altitude elements *simple*, *vfrOnTop*, *vfrOnTopPlus*, *block*, *above*, *altFixAlt*, *vfr*, *vfrPlus* may be included in the	nas:AboveAltitudeType @uom: ff:AltitudeMeasureType	Yes	**"xs:double"** @uom: **"FEET|METRES"**	Aircraft is flying above 60,000 feet: **60000** **uom:** **FEET**	No

DRAFT

Name [FH_FIXM, AH_FIXM, HU_FIXM]	Name in SimpleSchema [FH,AH,HU]	Definition	Type	Complex?	Format/Permissible Values	Example	Required?
		message.					
flight/assignedAltitude/altFixAlt/point	assignedAlt_08f	*assignedAltitude/altFixAlt* element is defined as an altitude prior to a specified fix, the specified fix itself, and altitude post specified fix. The element *altFixAlt/point* defines the specified fix associated with the altitude. The fix cannot be the departure or arrival point. Only one of the altitude elements *simple*, *vfrOnTop*, *vfrOnTopPlus*, *block*, *above*, *altFixAlt*, *vfr*, *vfrPlus* may be included in the message.	*fb:SignificantPointType* (abstract type) *fb:FixPointType/ ff:GeographicalLocationType/ fb:RelativePointType*	Yes	- *fb:FixPointType* **"[A-Z0-9]{2,5}"** - *ff:GeographicalLocationType* List of two **xs:double** (latitude followed by longitude) - *fb:RelativePointType* - fix: **"[A-Z0-9]{2,5}"** - distance: *ff:DistanceType* **xs:double** - radial: *fb:DirectionType* **xs:double** minInclusive = 0 maxInclusive =360	**MDG**	No
flight/assignedAltitude/altFixAlt/pre flight/assignedAltitude/altFixAlt/pre/@uom	assignedAlt_08f	*assignedAltitude/altFixAlt* element is defined as an altitude prior to a specified fix, the specified fix itself, and altitude post specified fix. The element *altFixAlt/pre* defines the altitude before the specified fix. Only one of the altitude elements *simple*, *vfrOnTop*, *vfrOnTopPlus*, *block*, *above*, *altFixAlt*, *vfr*, *vfrPlus* may be included in the	ff:AltitudeType uom: ff:AltitudeMeasureType	Yes	**"xs:double"** uom: **"FEET|METRES"**	**240000** **uom:** **FEET**	No.

DRAFT

Name [FH_FIXM, AH_FIXM, HU_FIXM]	Name in SimpleSchema [FH,AH,HU]	Definition	Type	Complex?	Format/Permissible Values	Example	Required?
		message.					
flight/assignedAltitude/altFixAlt/post flight/assignedAltitude/altFixAlt/post/@uom	assignedAlt_08f	*assignedAltitude/altFixAlt* element is defined as an altitude prior to a specified fix, the specified fix itself, and altitude post specified fix. The element *altFixAlt/pre* defines the altitude after the specified fix. Only one of the altitude elements *simple*, *vfrOnTop*, *vfrOnTopPlus*, *block*, *above*, *altFixAlt*, *vfr*, *vfrPlus* may be included in the message.	ff:AltitudeType uom: ff:AltitudeMeasureType	Yes	**"xs:double"** uom: **"FEET|METRES"**	**22000** **uom:** **FEET**	No.
flight/assignedAltitude/vfr	assignedAlt_08g	Its presence in the message specifies that the flight is flying Visual Flight Rules (VFR). Only one of the altitude elements *simple*, *vfrOnTop*, *vfrOnTopPlus*, *block*, *above*, *altFixAlt*, *vfr*, *vfrPlus* may be included in the message.	nas:VfrAltitudeType	Yes	**Empty element**		No
flight/assignedAltitude/vfrPlus flight/assignedAltitude/vfrPlus/@uom	assignedAlt_08h	It is used to specify that the flight is flying VFR at a specified altitude. Only one of the altitude elements *simple*, *vfrOnTop*, *vfrOnTopPlus*, *block*, *above*, *altFixAlt*, *vfr*, *vfrPlus* may be included in the	nas:VfrPlusAltitudeType uom: ff:AltitudeMeasureType	Yes	**"xs:double"** uom: **"FEET|METRES"**	The aircraft is flying VFR at 7,500 feet: **7500** uom: **FEET**	No

DRAFT

Name [FH_FIXM, AH_FIXM, HU_FIXM]	Name in SimpleSchema [FH,AH,HU]	Definition	Type	Complex?	Format/Permissible Values	Example	Required?
		message.					
flight/requestedAltitude/simple flight/requestedAltitude/simple/@uom	requestedAlt_09a	The element is used to specify requested altitude. Only one of the seven requested altitude elements may be included in a proposed flight message.	assignedAltitude/simple: nas:SimpleAltitudeType uom: ff:AltitudeMeasureType	Yes	**"xs:double"** uom: "**FEET|METRES**" Only one of the *requestedAltitude* elements *simple*, *vfrOnTop*, *vfrOnTopPlus*, *block*, *above*, *altFixAlt*, *vfr*, *vfrPlus* may be included in the message.	Aircraft is requesting to fly at 34,000 feet altitude: **34000**	No
flight/requestedAltitude/vfrOnTop	requestedAlt_09b	This element specifies an IFR flight requesting to operate above the clouds in VFR conditions.	nas:VfrOnTopAltitudeType	Yes	Empty element. Only one of the *requestedAltitude* elements *simple*, *vfrOnTop*, *vfrOnTopPlus*, *block*, *above*, *altFixAlt*, *vfr*, *vfrPlus* may be included in the message.	The presence of this empty element indicates VFR-ON-Top.	No
flight/requestedAltitude/vfrOnTopPlus flight/requestedAltitude/vfrOnTopPlus/@uom	requestedAlt_09c	VFR-ON-Top with altitude. It represents an Instrument Flight Rules (IFR) flight requesting to operate above the clouds in VFR conditions at the specified altitude.	nas:VfrOnTopPlusAltitudeType	Yes	**"xs:double"** uom: **"FEET|METRES"** Only one of the *requestedAltitude* elements *simple*, *vfrOnTop*, *vfrOnTopPlus*, *block*, *above*, *altFixAlt*, *vfr*, *vfrPlus* may be included in the message.	Aircraft requesting to fly VFR-ON-Top at 25,000 feet: **25000** uom: **feet**	No
flight/requestedAltitude/above flight/requestedAltitude/above/@uom	requestedAlt_09d	Element used for IFR flights requesting to operate above a specified altitude.	nas:AboveAltitudeType	Yes	**"xs:double"** uom: **"FEET|METRES"** Only one of the *requestedAltitude* elements *simple*, *vfrOnTop*, *vfrOnTopPlus*, *block*, *above*, *altFixAlt*, *vfr*, *vfrPlus* may be included in the message.	Aircraft is requesting to fly above 60,000 feet: **60000** **uom:** **FEET**	No

DRAFT

Name [FH_FIXM, AH_FIXM, HU_FIXM]	Name in SimpleSchema [FH,AH,HU]	Definition	Type	Complex?	Format/Permissible Values	Example	Required?
flight/requestedAltitude/block/above flight/requestedAltitude/block/above/@uom	requestedAlt_09e	The bottom level of the requested block of altitudes for the flight to fly at.	ff:AltitudeType	Yes	**"xs:double"** uom: **"FEET|METRES"** Only one of the *requestedAltitude* elements *simple*, *vfrOnTop*, *vfrOnTopPlus*, *block*, *above*, *altFixAlt*, *vfr*, *vfrPlus* may be included in the message.	*above:* **8000** *uom:* **FEET**	No
flight/requestedAltitude/block/below flight/requestedAltitude/block/below/@uom	requestedAlt_09e	The top level of the requested block of altitudes for the flight to fly at.	ff:AltitudeType	Yes	**"xs:double"** uom: **"FEET|METRES"** Only one of the *requestedAltitude* elements *simple*, *vfrOnTop*, *vfrOnTopPlus*, *block*, *above*, *altFixAlt*, *vfr*, *vfrPlus* may be included in the message.	*below:* **14000** *uom:* **FEET**	No
flight/requestedAltitude/vfr	requestedAlt_09f	Its presence in the message specifies that the flight is requesting to fly Visual Flight Rules (VFR).	nas:VfrAltitudeType	Yes	Empty element Only one of the *requestedAltitude* elements *simple*, *vfrOnTop*, *vfrOnTopPlus*, *block*, *above*, *altFixAlt*, *vfr*, *vfrPlus* may be included in the message.		No
flight/requestedAltitude/vfrPlus flight/requestedAltitude/vfrPlus/@uom	requestedAlt_09g	This element is used to represent a flight requesting to fly VFR at a specified altitude.	nas:VfrPlusAltitudeType	Yes	**"xs:double"** uom: **"FEET|METRES"** Only one of the *requestedAltitude* elements *simple*, *vfrOnTop*, *vfrOnTopPlus*, *block*, *above*,	The aircraft is requesting to fly VFR at 7,500 feet: **7500** uom: **feet**	N

DRAFT

Name [FH_FIXM, AH_FIXM, HU_FIXM]	Name in SimpleSchema [FH,AH,HU]	Definition	Type	Complex?	Format/Permissible Values	Example	Required?
					altFixAlt, *vfr*, *vfrPlus* may be included in the message.		
flight/agreed/route/@nasRouteText	flightPlanRoute_10a	This attribute is used to specify the trajectory followed by the airplane from the departure point to the arrival point, based on the fixes and routes along that trajectory.	fb:FreeTextType	No	**"[A-Z0-9+/*]{2,12}_?\.[A-Z0-9+\./]*\.[A-Z0-9+/*]{2,12}_?(/\d{4})?"** The element format consists of a string that includes fixes and routes along the trajectory flown by the airplane. The fixes and routes are specified using the FIX.ROUTE.FIX format, where either element can be implied, such as FIX..FIX, or ROUTE..ROUTE.	OKC.V14S.TUL.TUL090..FYV270.FYV	Yes
flight/departure/@departurePoint	departurePoint_26a	This attribute is used to specify the first point or other initial entity where the air traffic control/management system route starts.	fb:FreeTextType	No	xs:string minLength=2, maxLength=12 **"([A-Z0-9]{2,5}) | ([A-Z0-9]{2,5}\d{6}) | (\d{4}[A-Z]?/\d{4,5}[A-Z]?)"** Any of the standard ways to represent a fix can be used for this element (fix name, lat/long, or fix-radial-distance), including the standard airport designators.	**AB** **DFW** **KDFW** **SHP090015** **ATOKA300040** **3500N/04000W**	Yes
flight/arrival/@arrivalPoint	destination_27a	This attribute is used to specify the final point or other final entity where the air traffic control/management system route terminates.	fb:FreeTextType	No	**xs:string** minLength=2, maxLength=12 **"([A-Z0-9]{2,5}) | ([A-Z0-9]{2,5}\d{6}) | (\d{4}[A-Z]?/\d{4,5}[A-Z]?)"** Any of the standard ways to represent a fix can be used for this element (fix name, lat/long,	**AB** **DFW** **KDFW** **SHP090015** **ATOKA300040** **3500N/04000W**	Yes

DRAFT

Name [FH_FIXM, AH_FIXM, HU_FIXM]	Name in SimpleSchema [FH,AH,HU]	Definition	Type	Complex?	Format/Permissible Values	Example	Required?
					or fix-radial-distance), including the standard airport designators.		
flight/agreed/route/nasadaptedArrivalRoute/nasFavNumber	FAV_143b0 FAV_143b1 FAV_143b2 FAV_143b3	The *nasadaptedArrivalRoute* element is the container for *Adapted Arrival Route (AAR)* information. This information consists in the list of Fixed Airspace Volume (FAV) numbers that contain the AAR fixes. The element *nasadaptedArrivalRoute/nasFavNumber* represents a FAV number that is an element of this list.	fb:FreeTextType	No	**"\d{4}"** The format is four-digits.	7601	No
flight/agreed/route/adaptedArrivalDepartureRoute/@nasRouteIdentifier	ADARId_141a/	If required for the flight, this element specifies the Adapted Departure Arrival Route (ADAR)/ Adapted Departure Route (ADR)/ Adapted Arrival Route (AAR) name.	fb:FreeTextType	No	**[A-Z0-9/\-\?\(\)\.,=\+]{5}"** The format consists of five characters.	DA001	No
flight/agreed/route/adaptedDepartureRoute/@nasRouteIdentifier	ADRId_141b	If required for the flight, this element specifies the Adapted Departure Route (ADR) name.	fb:FreeTextType	No	**[A-Z0-9/\-\?\(\)\.,=\+]{5}"** The format consists of five characters.	PD001	No
flight/agreed/route/nasadaptedArrivalRoute/@nasRouteIdentifier	AARId_141c	If required for the flight, this element specifies the Adapted Arrival Route (AAR) name.	fb:FreeTextType	No	**[A-Z0-9/\-\?\(\)\.,=\+]{5}"** The format consists of five characters.	PA001	No

DRAFT

Name [FH_FIXM, AH_FIXM, HU_FIXM]	Name in SimpleSchema [FH,AH,HU]	Definition	Type	Complex?	Format/Permissible Values	Example	Required?
flight/agreed/route/adaptedArrivalDepartureRoute/@nasRouteAlphanumeric	ADARFld10_142a ADARNonFld10_142b	This element contains the adapted ADAR preferential route in Field 10 or non-Field 10 formats. The Preferential Route Alphanumerics are used to control the flow and separation of traffic departing and arriving at designated airports. An ADAR has the complete preferential routing from the departure airport to the arrival airport.	fb:FreeTextType	No	**"([A-Z0-9\./]{4,44})|([A-Z0-9\./\+]{4,44})"** The Field10 format is: **"[A-Z0-9\./]{4,44"** The non-Field10 format is: **"[A-Z0-9\./\+]{4,44}"** A "+" delimiter precedes and follows the non-Field10 elements.	Field10 format: SX2.PSX.V20.CRP Non-Field10 format: +LISSE6+ +TS1 MEM270 LIT050+	No
flight/agreed/route/adaptedDepartureRoute/@nasRouteAlphanumeric	ADRFld10_142c ADRNonFld10_142d	Adapted ADR preferential route in Field 10 or non-Field 10 format.	fb:FreeTextType	No	**"([A-Z0-9\./*]{4,84}) | ([A-Z0-9\./\+ -]{4,84})"** Field 10 format: **"([A-Z0-9\./*]{4,84"** Non-Field 10 format: **"[A-Z0-9\./\+ -]{4,84}"** A "+" delimiter precedes and follows the non-Field10 elements.	Field 10 format: **.ALAMO6.HENLY.J131.FUZ.J105.** Non-Field 10 format: **+RV J25+CRP.LISSE6**	No
flight/agreed/route/nasadaptedArrivalRoute/@nasRouteAlphanumeric	AARFld10_142e AARNonFld10_142f	This element includes the AAR preferential route in Field 10 or non-Field 10 formats.	fb:FreeTextType	No	**"([A-Z0-9\./]{4,97}) | ([A-Z0-9\./\+]{4,97})"** Field 10 format: **"[A-Z0-9\./]{4,97}"** Non-Field 10 format: **"[A-Z0-9\./\+]{4,97}"** A "+" delimiter precedes and	Field 10 format: **./.BLEUZ.RYTHM3.** Non-Field 10 format: **.J25.CRP+LISSE6+** Notice the non-Field10 substring that is enclosed between "+" characters.	No

DRAFT

Name [FH_FIXM, AH_FIXM, HU_FIXM]	Name in SimpleSchema [FH,AH,HU]	Definition	Type	Complex?	Format/Permissible Values	Example	Required?
					follows the non-Field10 elements.		
flight/flightPlan/@flightPlanRemarks	remarks_11c	NAS Flight Plan Field 11 remarks processed by the Traffic Flow Management System (TFMS) and used for TFM purposes.	fb:FreeTextType	No	The string is from 1 to 400 characters in length.	**OAIR EVAC AMG/N0482F290 SQT/N0479F310 JOL+**	No
flight/agreed/route/@initialFlightRules	flightRules_908a	The regulation, or combination of regulations, that governs all aspects of operations under which the pilot plans to fly.	fb:FlightRulesType	No	**"IFR|VFR"** If **Y** or **Z** is used, the point or points at which a change of flight rules is planned should be shown in the route. NOTE Can no longer represent all four options (IFR, VFR, IFR First, VFR First), just use first state (IFR/VFR) for transitioning rules.	**IFR**	No
flight/@flightType	typeOfFlight_908b	This element specifies the type of flight that represents an indication of the rule under which an air traffic controller provides categorical handling of a flight.	fx:TypeOfFlightType	No	**"MILITARY|GENERAL|SCHEDULED|NON_SCHEDULED|OTHER"**	**SCHEDULED**	No
flight/aircraftDescription/@wakeTurbulence	wakeTurbulenceCat_909c	Wake turbulence category: the ICAO classification of the aircraft wake turbulence, based on the maximum certified take off mass.	fx:WakeTurbulenceCategoryType	No	**"[JHML]"** **J** = Super Heavy **H** = Heavy **M** = Medium **L** = Light	**H**	No

DRAFT

Name [FH_FIXM, AH_FIXM, HU_FIXM]	Name in SimpleSchema [FH,AH,HU]	Definition	Type	Complex?	Format/Permissible Values	Example	Required?
flight/aircraftDescription/capabilities/@standardCapabilities	comNavApproachEquipICAO2012_910c	If present, this attribute indicates that aircraft has the "standard" capabilities for the flight.	fx:StandardCapabilitiesIndicatorType	No	**Empty attribute.**		No
flight/aircraftDescription/capabilities/communication/communicationCode	comNavApproachEquipICAO2012_910c	Describes the aircraft communication code.	fx:CommunicationCapabilitiesType	No	**"E1|E2|E3|H|M1|M2|M3|P1| P2| P3| P4| P5| P6| P7| P8| P9|U|V|Y"** where: **E1** – FMC WPR ACARS **E2** – D-FIS ACARS **E3** – PDC ACARS **H** – HF RTF **M1** – ATC RTF SATCOM (INMARSAT) **M2** - ATC RTF SATCOM (MTSAT) **M3** – ATC RTF (Iridium) **P1**-**P9** – Reserved for RCP **U** – UHF RTF **V** – VHF RTF **Y** – VHF with 8.33 kHz spacing capacity	**E2**	No
flight/aircraftDescription/capabilities/communication/dataLinkCode	comNavApproachEquipICAO2012_910c	Data Link Communication Capabilities: The serviceable equipment and capabilities available on the aircraft at the time of flight that may be used to communicate data to and from the aircraft.	fx: DataLinkCodeType	No	**"J[1-7]"** Where: **"J1"** = CPDLC VDL Mode 2 **"J2"** = CPDLC FANS 1/A HFDL **"J3"** = CPDLC FANS 1/A VDL Mode A **"J4"** = CPDLC FANS 1/A VDL Mode 2	**J2**	No

DRAFT

Name [FH_FIXM, AH_FIXM, HU_FIXM]	Name in SimpleSchema [FH,AH,HU]	Definition	Type	Complex?	Format/Permissible Values	Example	Required?
					"J5" = CPDLC FANS 1/A SATCOM (INMARSAT) **"J6"** = CPDLC FANS 1/A SATCOM (MTSAT) **"J7"** = CPDLC FANS 1/A SATCOM (Iridium)		
flight/aircraftDescription/capabilities/navigation/navigationCode	comNavApproachEquipICAO2012_910c	The serviceable navigation equipment available on board of aircraft at the time of flight and for which the flight crew is qualified. This element can contain a combination of the ICAO codes for navigation capabilities: {A,B,C,D,F,G,I,K,L,O,T,W,X}.	fx: NavigationCodeType	No	**"[ABCDFGIKLOTWX]+"** Where: **"A"** – GBAS landing system **"B"** = LPV **"C"** = LORAN C **"D"** = DME **"F"** = ADF **"G"** = GNSS **"I"** = Inertial Navigation **"K"** = MLS **"L"** = ILS **"O"** = VOR **"T"** = TACAN **"W"** = RVSM **"X"** = MNPS	**W**	No
flight/aircraftDescription/capabilities/surveillance/surveillanceCode	survEquipICAO2012_910d	This element describes the aircraft surveillance code.	fx:SurveillanceCodeType	No	**"[AB1B2CD1EG1HILPSU1U2V1V2X]"** Where: **"A"** – Transponder Mode A **"B1"** – ADS-B with dedicated 1090 mHz ADS-B "out" capability **"B2"** – ADS-B with dedicated 1090 mHz ADS-B "out" and "in" capability **"C"** – Transponder Mode A and C	**B2**	No

DRAFT

Name [FH_FIXM, AH_FIXM, HU_FIXM]	Name in SimpleSchema [FH,AH,HU]	Definition	Type	Complex?	Format/Permissible Values	Example	Required?
					"D1" – ADS-C with FANS 1/A capabilities **"G1"** - ADS-C with ATN capabilities **"E"** – Transponder – Mode S, including aircraft identification, pressure-altitude and extended squitter Automated Dependent Surveillance-Broadcast (ADS-B) capability **"H"** – Transponder – Mode S, including aircraft identification, pressure-altitude and enhanced surveillance capability **"I"** - Transponder – Mode S, including aircraft identification, but no pressure-altitude capability **"L"** – Transponder – Mode S, including aircraft identification, pressure-altitude, extended squitter (ADS-B) and enhanced surveillance capability **"P"** – Transponder – Mode S, including pressure-altitude, but no aircraft identification **"S"** – Transponder – Mode S, including both pressure-altitude and aircraft identification capability **"U1"** - ADS-B "out" capability using UAT **"U2"** - ADS-B "out" AND "IN" capability using UAT **"V1"** - ADS-B "out" capability		

DRAFT

Name [FH_FIXM, AH_FIXM, HU_FIXM]	Name in SimpleSchema [FH,AH,HU]	Definition	Type	Complex?	Format/Permissible Values	Example	Required?
					using VDL Mode 4 **"V2"** - ADS-B "out" and "in" capability using VDL Mode 4 **"X"** – Transponder - Mode S with neither aircraft identification nor pressure-altitude capability		
flight/arrival/arrivalAerodromeAlternate/@code or flight/arrival/arrivalAerodromeAlternate/point flight/arrival/arrivalAerodromeAlternate/@name	altAero_916c or ALTNIndicator_918o	ICAO designator or the name of an alternate aerodrome to which an aircraft may proceed, should it become either impossible or inadvisable to land at the original destination aerodrome or an alternate destination location. More than one alternate arrival aerodromes may be specified for a flight.	*arrivalAerodromeAlternate* is of abstract type: *fb:AerodromeReferenceType* that can instantiate as: *ff:IcaoAerodromeReferenceType* if the aerodrome has an ICAO designator, or: *fb:UnlistedReferenceType,* otherwise. Type of *arrivalAerodromeAlternate/@code*: *ff:IcaoAerodromeReferenceType* Type of *arrivalAerodrome/point:* *fb:SignificantPointType* (abstract type that can instantiate as: *fb:FixPointType/* *ff:GeographicalLocationType/* *fb:RelativePointType*) Type of *arrivalAerodromeAlter*	Yes	The aerodrome is specified using its 4-letter ICAO name if it has one. If no ICAO location indicator has been allocated, the aerodrome is identified by its name ("Dallas Fort Worth") or a 3-character IATA Alternate Identifier ("DFW") and a significant point consisting of one of the following data: • geographic location (latitude and longitude), or • location of a fix specified by name, or • fix/radial/distance (FRD). If the aerodrome has an ICAO designator, the attribute *@code* includes the ICAO code according to the format: **"[A-Z]{4}"** Otherwise, if no ICAO location has been allocated, the unlisted aerodrome is identified by its name (optionally) plus a significant point according to the following format: -*arrivalAerodrome/@name*:	*@code*: **KDFW** *@name*: **MILLSPAW FARM** *point/@fix:* **HBZ** *point/distance* (*@uom* **NAUTICAL_MILES):** **10.0** *point/radial* (*@uom* **DEGREES**): **236.0**	No

DRAFT

Name [FH_FIXM, AH_FIXM, HU_FIXM]	Name in SimpleSchema [FH,AH,HU]	Definition	Type	Complex?	Format/Permissible Values	Example	Required?
			nate/@name: *fb:AerodromeNameType*		**xs:string** -for *arrivalAerodrome/point* there are three ways to specify the significant point*:* *1)* location of fix specified by name *(* type f*b:FixPointType)*: **"[A-Z0-9]{2,5}"** *2)* geographic location specified by latitude and longitude *(ff:GeographicalLocationType):* - list of two **xs:double** (latitude followed by longitude) 3) fix-radial-distance (*fb:RelativePointType):* (a) fix: **"[A-Z0-9]{2,5}"** (b) distance (*ff:DistanceType*): **xs:double** (c) radial (*fb:DirectionType*): **xs:double** minInclusive = 0 maxInclusive =360		
flight/agreed/route/estimated ElapsedTime/location	EETIndicator_918b	This element specifies the location associated with the elapsed time from takeoff to reach a significant point or Flight Information Region (FIR) boundary along the route of the flight.	fx:ElapsedTimeLocationType	*Yes*	The *location* associated with the elapsed time can be *longitude*, *significant point* or *region* (Flight Information Region (FIR) boundary): - *longitude*: **xs:double**	**KZNY**	No

DRAFT

Name [FH_FIXM, AH_FIXM, HU_FIXM]	Name in SimpleSchema [FH,AH,HU]	Definition	Type	Complex?	Format/Permissible Values	Example	Required?
					- *point*: - fb:FixPointType **"[A-Z0-9]{2,5}"** - ff:GeographicalLocationType List of two **xs:double** (latitude followed by longitude) - fb:RelativePointType - fix: **"[A-Z0-9]{2,5}"** - distance: ff:DistanceType **xs:double** - radial: fb:DirectionType **xs:double** minInclusive = 0 maxInclusive =360 - *region*: **xs:string**		
flight/agreed/route/estimatedElapsedTime/@elapsedTime	EETIndicator_918b	This element specifies the estimated amount of time from takeoff to reach a significant point or Flight Information Region (FIR) boundary along the route of the flight.	ff:DurationType	No	**xs:duration**	**PT1H46M**	No
flight/routeToRevisedDestination/route/@routeText	RIFIndicator_918c	This attribute specifies the ICAO route text of a route to a revised destination aerodrome. The route text is as depicted from the flight plan.	fb:FreeTextType	No	Free-form string of up to 4,096 characters. The destination aerodrome has to be specified using the four-letter ICAO location code.	**DTA HEC KLAX**	No
flight/aircraftDescription/@registration	REGIndicator_918d	A unique, alphanumeric string that identifies a civil	fx:AircraftRegistrationType	No	**"[A-Z0-9]{1,7}"** Up to 4,096 characters.	**N5258E**	No

DRAFT

Name [FH_FIXM, AH_FIXM, HU_FIXM]	Name in SimpleSchema [FH,AH,HU]	Definition	Type	Complex?	Format/Permissible Values	Example	Required?
		aircraft and consists of the Aircraft Nationality or Common Mark and an additional alphanumeric string assigned by the state of registry or common mark registering authority.			NOTE Pattern ([A-Z0-9]{1,7}) does not always fit incoming data - leads to validation errors.		
flight/aircraftDescription/capabilities/communication/@selectiveCallingCode	SELIndicator_918e	This attribute specifies the Selective Calling (SELCAL) Code that consists of two 2-letter pairs. SELCAL is a selective-calling radio system that alerts aircraft crew to incoming radio communications. It acts as a paging system for an ATS unit to establish voice communications with the pilot of an aircraft.	fx:SelectiveCodeType	No	**"[A-HJ-MP-S]{4}"**	**ACHA** **BRLM**	No
flight/operator/operatingOrganization/organization/@name	OPRIndicator_918f	This attribute specifies the full official name of the State, Organization, Authority, aircraft operating agency, handling agency engaged in or offering to engage in aircraft operation.	ff:TextNameType	No	xs:string NOTE Always map to organization.	UAL	No
flight/specialHandling	STSIndicator_918g	This element specifies the special handling reason: a property of the flight that requires ATS units to give it special consideration, such as hospital aircraft.	fx:SpecialHandlingCodeType	No	The following are the only valid special handling indicators: **"ALTRV|ATFMX|FFR|FLTCK|HAZMAT|HEAD|HOSP|HUM|MARSA|MEDEVAC|NONRVSM|SAR|STATE"**	**ALTRV**	No

DRAFT

Name [FH_FIXM, AH_FIXM, HU_FIXM]	Name in SimpleSchema [FH,AH,HU]	Definition	Type	Complex?	Format/Permissible Values	Example	Required?
		There could be multiple special handling indicators.					
flight/aircraftDescription/aircraftType/otherModelData	TYPIndicator_918h	Other, non-ICAO, identification of the aircraft.	fb:FreeTextType	No	Free-form string of up to 4,096 characters.	**CESNA140**	No
flight/aircraftDescription/@aircraftPerformance	PERIndicator_918i	A coded category assigned to the aircraft based on a speed directly proportional to its stall speed, which functions as a standardized basis for relating aircraft maneuverability to specific instrument approach procedures.	fx:AircraftPerformanceCategoryType	No	Single valid letter specified in PAN-OPS 8168 Volume 1: **"[ABCDEH]"** where: **A** – Indicated airspeed (IAS) less than 169 km/h (91kt) **B** – IAS between 169 km/h (91kt) and 224 km/h (121 kt) **C** – IAS between 224 km/h (121 kt) and 261 km/h (141 kt) **D** – IAS between 261 km/h (141 kt) and 307 km/h (166 kt) **E** - IAS between 307 km/h (166 kt) and 391 km/h (211 kt) **H** - Helicopters	**C**	No
flight/aircraftDescription/capabilities/communication/@otherCommunicationCapabilities	COMIndicator_918j	This element contains additional Communication Equipment available on aircraft not specified in the route/@nasRouteText attribute.	fb:FreeTextType	No	Free-form string of up to 4,096 characters.	**HF ONLY** **TCAS**	No
flight/aircraftDescription/capabilities/communication/@otherDataLinkCapabilities	DATIndicator_918k	This element specifies data link capabilities available on the aircraft.	fb:FreeTextType	No	**"[SHVM]{1,4}"** Free-form string of up to 4,096 characters.	**SV**	No

DRAFT

Name [FH_FIXM, AH_FIXM, HU_FIXM]	Name in SimpleSchema [FH,AH,HU]	Definition	Type	Complex?	Format/Permissible Values	Example	Required?
					where: **S** – satellite data link **H** – HF data link **V** – VHF data link **M** – SSR Mode S data link One or more of the valid letters may be specified in this element.		
flight/aircraftDescription/capabilities/navigation/@otherNavigationCapabilities	NAVIndicator_918l	This element contains Navigation Equipment Data. It is used for additional Navigation Equipment available on board of aircraft not specified in the route/@nasRouteText attribute.	string	No	Free-form string of up to 4,096 characters.	**ADF ONLY**	No
flight/departure/departureAerodrome/@name flight/departure/departureAerodrome/point	DEPIndicator_918m	This element contains the name of the unlisted aerodrome from which the flight departs. If the departure aerodrome has an ICAO designator, it is stored in the attribute flight/departure/@departure Point, as suggested in 19.	*fb:UnlistedReferenceType*	Yes	The unlisted aerodrome is identified by its name ("Dallas Fort Worth") or 3-character IATA Alternate Identifier (such as "DFW") plus a significant point (*fb:UnlistedReferenceType*) according to the following format: *-departureAerodrome/@name*: **xs:string** *-departureAerodrome/point:* there are three ways to specify the significant point*:* *1)* fix location *(* type f*b:FixPointType)*: **"[A-Z0-9]{2,5}"** *2)* location specified by latitude and longitude coordinates	**DFW**	No

Name [FH_FIXM, AH_FIXM, HU_FIXM]	Name in SimpleSchema [FH,AH,HU]	Definition	Type	Complex?	Format/Permissible Values	Example	Required?
					(ff:GeographicalLocationType): - list of two **xs:double** (latitude followed by longitude) 3) fix-radial-distance (*fb:RelativePointType):* (a) fix: **xs:string** with pattern: **"[A-Z0-9]{2,5}"** (b) distance (*ff:DistanceType*): **xs:double** (c) radial (*fb:DirectionType*): **xs:double** minInclusive = 0 maxInclusive =360		
flight/arrival/arrivalAerodrome/@name flight/arrival/arrivalAerodrome/point	DESTIndicator_918n	This elements includes the name and location of the unlisted aerodrome at which the flight is scheduled to arrive. If the arrival aerodrome has an ICAO designator, it is stored in the attribute flight/arrival/@arrivalPoint, as suggested in 19.	Abstract type: fb:AerodromeReferenceType that instantiates as: *fb:UnlistedReferenceType* Type of *arrivalAerodromeAlternate/@name*: *fb:AerodromeNameType* Type of *arrivalAerodrome/point:* *fb:SignificantPointType* (abstract type that can	Yes	The unlisted aerodrome is identified by its name (optionally) plus a significant point according to the following format: *-arrivalAerodrome/@name*: **xs:string** -for *arrivalAerodrome/point* there are three ways to specify the significant point*:* *1)* location of fix specified by name *(* type fb*:FixPointType)*: **"[A-Z0-9]{2,5}"** *2)* geographic location specified by latitude and longitude *(ff:GeographicalLocationType):* - list of two **xs:double**	*@name*: **MILLSPAW FARM** *point/@fix:* **HBZ** *point/distance* (*@uom* **NAUTICAL_MILES):** **10.0** *point/radial* (*@uom* **DEGREES**): **236.0**	No

DRAFT

Name [FH_FIXM, AH_FIXM, HU_FIXM]	Name in SimpleSchema [FH,AH,HU]	Definition	Type	Complex?	Format/Permissible Values	Example	Required?
			instantiate as: *fb:FixPointType/ ff:GeographicalLocationType/ fb:RelativePointType*)		(latitude followed by longitude) 3) fix-radial-distance (*fb:RelativePointType):* (a) fix: **"[A-Z0-9]{2,5}"** (b) distance (*ff:DistanceType*): **xs:double** (c) radial (*fb:DirectionType*): **xs:double** minInclusive = 0 maxInclusive =360		
flight/enRoute/alternateAerodrome	RALTIndicator_918p	This element identifies an En Route Alternate Aerodrome to which a flight could be diverted while en route, if needed. Multiple alternate aerodromes may be specified.	Abstract type: *fb:AerodromeReferenceType* that instantiates as: *ff:IcaoAerodromeReferenceType* if the aerodrome has an ICAO designator, or as: *fb:UnlistedReferenceType* otherwise. *@code:* *ff:IcaoAerodromeReferenceType*) *@name*: AerodromeNameType *point:* *fb:SignificantPointType* (abstract type that can instantiate as:	Yes	The aerodrome may be identified by: - ICAO code: *alternateAerodrome/@code*: **"[A-Z]{4}"**, or: - name ("Dallas Fort Worth") or 3-character IATA Alternate Identifier (such as "DFW") plus significant point, for an unlisted aerodrome, according to the following format: -*alternateAerodrome/@name*: **xs:string** -for *alternateAerodrome/point* there are three ways to specify the significant point*:* *1)* location of fix specified by name *(* type f*b:FixPointType)*: **"[A-Z0-9]{2,5}"** *2)* geographic location	**KDFW** or: *@name*: **MILLSPAW FARM** *point/@fix:* **HBZ** *point/distance* (*@uom* **NAUTICAL_MILES):** **10.0** *point/radial* (*@uom* **DEGREES**): **236.0**	No

Name [FH_FIXM, AH_FIXM, HU_FIXM]	Name in SimpleSchema [FH,AH,HU]	Definition	Type	Complex?	Format/Permissible Values	Example	Required?
			fb:FixPointType/ ff:GeographicalLocationType/ fb:RelativePointType)		specified by latitude and longitude *(ff:GeographicalLocationType):* - list of two **xs:double** (latitude followed by longitude) 3) fix-radial-distance (*fb:RelativePointType):* (a) *point/@fix*: **"[A-Z0-9]{2,5}"** (b) *point/distance* (*ff:DistanceType*): **xs:double** (c) *point/radial* (*fb:DirectionType*): **xs:double** minInclusive = 0 maxInclusive =360		
flight/aircraftDescription/@aircraftAddress	CODEIndicator_918q	A code that enables the exchange of text-based messages between suitably equipped Air Traffic Service (ATS) ground systems and aircraft cockpit displays (the aircraft Controller-Pilot Data Link Communications (CPDLC) address).	fx:AircraftAddressType	No	**"[0-9A-F]{6}"**	**45FA16**	No
flight/aircraftDescription/capabilities/surveillance/@otherSurveillanceCapabilities	SURIndicator_918s	This element specifies the surveillance applications or capabilities not specified in the attribute *flight/agreed/route/@localIntendedRoute*.	fb:FreeTextType	No	Free-form string of up to 4096 characters.	**282B**	No

DRAFT

Name [FH_FIXM, AH_FIXM, HU_FIXM]	Name in SimpleSchema [FH,AH,HU]	Definition	Type	Complex?	Format/Permissible Values	Example	Required?
		.					
flight/agreed/route/segment/routePoint/point	DLEIndicator_918t	The element *routePoint/point* specifies a single point along the flight route.	fb:SignificantPointType (abstract type) *fb:FixPointType/ ff:GeographicalLocationType/ fb:RelativePointType*	Yes	- *fb:FixPointType* **"[A-Z0-9]{2,5}"** - *ff:GeographicalLocationType* List of two **xs:double** (latitude followed by longitude) - *fb:RelativePointType* - fix: **"[A-Z0-9]{2,5}"** - distance: *ff:DistanceType* **xs:double** - radial: *fb:DirectionType* **xs:double** minInclusive = 0 maxInclusive =360	**MDG**	No
flight/agreed/route/segment/routePoint/@delayAtPoint	DLEIndicator_918t	The attribute routePoint/@*delayAtPoint* specifies the length of time the flight is expected to be delayed at this specific point en route.	ff:DurationType	No	xs:duration	**PT46M**	No
flight/departure/takeoffAlternateAerodrome	TALTIndicator_918u	This element specifies an alternate aerodrome at which an aircraft can land, should it become necessary shortly after takeoff, and it is not possible to land at the departure aerodrome. Multiple alternate takeoff	fb:AerodromeReferenceType	Yes	The aerodrome may be identified by: - its ICAO code ("KDFW") (*ff:IcaoAerodromeReferenceType*) in the attribute *takeoffAlternateAerodrome/@code,* where the format is: **"[A-Z]{4}"** - its name ("Dallas Fort Worth")	**KDFW**	No

DRAFT

Name [FH_FIXM, AH_FIXM, HU_FIXM]	Name in SimpleSchema [FH,AH,HU]	Definition	Type	Complex?	Format/Permissible Values	Example	Required?
		aerodromes may be specified.			or 3-character IATA Alternate Identifier (such as "DFW") *takeoffAlternateAerodrome/@name* (optional) and a significant point *takeoffAlternateAerodrome/point,* for an unlisted aerodrome (*fb:UnlistedReferenceType*). Format for *takeoffAlternateAerodrome/@name:* **xs:string** Format for *takeoffAlternateAerodrome/point*: - *fb:FixPointType* **"[A-Z0-9]{2,5}"** - *ff:GeographicalLocationType* List of two **xs:double** (latitude followed by longitude) - *fb:RelativePointType* - fix: **"[A-Z0-9]{2,5}"** - distance: *ff:DistanceType* **xs:double** - radial: *fb:DirectionType* **xs:double** minInclusive = 0 maxInclusive =360		
flight/originator/aftnAddress flight/originator/flightOriginator	ORGNIndicator_918w	This element contains information about the flight originator that initiated the flight. It	Type of *originator/aftnAddress*: fb:AftnAddressType	No	For *aftnAddress:* **"[A-Z]{8}"** For *flightOriginator:* Free-form string of up to 4096	**LEBBYNYX**	No

DRAFT

Name [FH_FIXM, AH_FIXM, HU_FIXM]	Name in SimpleSchema [FH,AH,HU]	Definition	Type	Complex?	Format/Permissible Values	Example	Required?
		specifies the originator's eight-letter Aeronautical Fixed Telecommunication Network (AFTN) station address or other appropriate contact details, in cases where the originator of the flight plan may not be readily identified, as required by the appropriate ATS authority.	Type of *originator/flightOrigin ator*: fb:FreeTextType		characters.		
flight/aircraftDescription/capabilities/navigation/performanceBasedCode	PBNIndicator_918x	This element specifies a coded category denoting which Required Navigation Performance (RNP) and Area Navigation (RNAV) requirements can be met by the aircraft while operating in the context of a particular airspace when supported by the appropriate navigation infrastructure.	fx:PerformanceBasedCodeType	No	**"A1|B[1-6]|C[1-4]|D[1-4]|L1|O[1-4]|S[1-2]|T[1-2]"** *RNAV* and *RNP* capabilities are two-characters each, as follows: *RNAV* specifications: **A1** RNAV10 (RNP 10) **B1** RNAV 5 all permitted sensors **B2** RNAV 5 GNSS **B3** RNAV 5 DME/DME **B4** RNAV 5 VOR/DME **B5** RNAV 5 INS or IRS **B6** RNAV 5 LORANC **C1** RNAV 2 all permitted sensors **C2** RNAV 2 GNSS **C3** RNAV 2 DME/DME **C4** RNAV 2 DME/DME/IRU **D1** RNAV 1 all permitted sensors **D2** RNAV 1 GNSS **D3** RNAV 1 DME/DME **D4** RNAV 1 DME/DME/IRU *RNP* specifications:	**B1O1**	No

DRAFT

Name [FH_FIXM, AH_FIXM, HU_FIXM]	Name in SimpleSchema [FH,AH,HU]	Definition	Type	Complex?	Format/Permissible Values	Example	Required?
					L1 RNP 4 **O1** Basic RNP 1 all permitted sensors **O2** Basic RNP 1 GNSS **O3** Basic RNP 1 DME/DME **O4** Basic RNP 1 DME/DME/IRU **S1** RNP APCH **S2** RNP APCH with BAR-VNAV **T1** RNP AR APCH with RF (special authorization required) **T2** RNP AR APCH without RF (special authorization required)		
flight/aircraftDescription/accuracy/cmsFieldType	RNVArrival_925a … RNVSpare1_925e RNVSpare2_925f RNPArrival…_925g RNPEnroute_925h … RNPSpare1…_925k RNPSpare2…_925l	The element *cmsFieldType* contains the flight's navigation accuracy value for the phase of flight, specified in the Performance-Based Navigation Phase.	*ff:DistanceType*	Yes	xs:double	**0.3**	No
flight/aircraftDescription/accuracy/cmsFieldType/@type	RNVArrival_925a … RNVSpare1_92	The attribute *cmsFieldType/@type* specifies whether the accuracy measure in	nas:CmsAccuracyTypeType	No	**"RNV|RNP"**	**RNV**	No

DRAFT

Name [FH_FIXM, AH_FIXM, HU_FIXM]	Name in SimpleSchema [FH,AH,HU]	Definition	Type	Complex?	Format/Permissible Values	Example	Required?
	5e RNVSpare2_925f RNPArrival…_925g RNPEnroute_925h … RNPSpare1…_925k RNPSpare2…_925l	Performance-Based Navigation Accuracy is measuring Area Navigation (RNAV) or Required Navigation Performance (RNP).					
flight/aircraftDescription/accuracy/cmsFieldType/@phase	RNVArrival_925a … RNVSpare1_925e RNVSpare2_925f RNPArrival…_925g RNPEnroute_925h … RNPSpare1…_925k RNPSpare2…_925l	The attribute *cmsFieldType/@phase* specifies the phase of flight for which navigation performance is being recorded.	nas:NasPerformanceBasedNavigationPhaseType	No	**"DEPARTURE|ARRIVAL|ENROUTE|OCEA NIC|SPARE_1| SPARE_2"**	**ARRIVAL**	No
flight/aircraftDescription/accuracy/cmsFieldType/@uom	RNVArrival_925a … RNVSpare1_925e	The attribute *cmsFieldType/@uom* specifies the unit of measure for the flight's navigation accuracy value.	*ff:DistanceMeasureType*	No	**"NAUTICAL_MILES|MILES|KILOMETERS"**	**NAUTICAL_MILES**	Yes

DRAFT

Name [FH_FIXM, AH_FIXM, HU_FIXM]	Name in SimpleSchema [FH,AH,HU]	Definition	Type	Complex?	Format/Permissible Values	Example	Required?
	RNVSpare2_925f RNPArrival…_925g RNPEnroute_925h … RNPSpare1…_925k RNPSpare2…_925l						
flight/supplementalData/additionalFlightInformation/nameValue/@name flight/supplementalData/additionalFlightInformation/nameValue/@value	ICAO1stAdaptedField18_999a ICAO1stAdaptedField18_999b ICAO1stAdaptedField18_999c ICAO1stAdaptedField18_999d ICAO1stAdaptedField18_999e ICAO1stAdaptedField18_999f ICAO1stAdaptedField18_999g ICAO1stAdaptedField18_999h ICAO1stAdaptedField18_999i ICAO1stAdaptedField18_999j ICAO1stAdaptedField18_999k ICAO1stAdapte	Additional information about a flight that does not fall into other predefined category. The information is expressed in key-value pairs. The element consists of an identification tag/indicator and the relevant value. **NOTE** There are 25 fields that could be stored under additionalFlightInformation but only 10 slots allowed in FIXM. Additionally, SFDPS is planning on using some of these slots for storing a number SFDPS specific items that did not seem to be a good choice for addition in the FIXM U.S. Extension. Data analysis has shown no more than five of these adapted field	Type of *additionalFlightInformation* is a list of up to 10 name-value pairs: *fb:NameValueListType* : Type of *nameValue*: *fb:NameValuePairType* Type for attribute *name*: *fb:FreeTextType* Type for attribute *value*: *fb:FreeTextType*	No	Format for *@name:* **"[A-Z0-9_]{1,20}"** Format for *@value:* **xs:string** **minLength=1, maxLength=100**		No

DRAFT

Name [FH_FIXM, AH_FIXM, HU_FIXM]	Name in SimpleSchema [FH,AH,HU]	Definition	Type	Complex?	Format/Permissible Values	Example	Required?
	dField18_999l ICAO1stAdapte dField18_999m ICAO1stAdapte dField18_999n ICAO1stAdapte dField18_999o ICAO1stAdapte dField18_999p ICAO1stAdapte dField18_999q ICAO1stAdapte dField18_999r ICAO1stAdapte dField18_999s ICAO1stAdapte dField18_999t ICAO1stAdapte dField18_999u ICAO1stAdapte dField18_999v ICAO1stAdapte dField18_999w ICAO1stAdapte dField18_999x ICAO1stAdapte dField18_999y	18 entries tend to appear in the actual data feed but this is a definite risk if more begin to show up.					
flight/agreed/route/@localIntendedRoute	localIntendedRoute_10b	The Local Intended Route attribute contains the flight plan route that is coordinated to penetrated facilities. It consists of the flight plan route merged with any expected-to-be-applied-by-the-controlling-	*fb:FreeTextType*	No	**"[A-Z0-9+/*]{2,12}_?\.[A-Z0-9+\./]*\.[A-Z0-9+/*]{2,12}_?(/\d{4})?"** Minimum length = 3 Maximum length = 4096		No

DRAFT

Name [FH_FIXM, AH_FIXM, HU_FIXM]	Name in SimpleSchema [FH,AH,HU]	Definition	Type	Complex?	Format/Permissible Values	Example	Required?
		center Adapted Departure Routes (ADRs), Adapted Departure Arrival Routes (ADARs) or Adapted Arrival Routes (AARs). It is intended for the clients that wish to know the expected state of the flight plan when the current facility releases control of the flight. The attribute localIntendedRoute contains the filed route (flight/agreed/route/@nasRouteText) merged with any locally applicable adapted routes (preferential routes, transition fixes and A-line fixes). Optional localIntendedRoute is sent to ATM-IPOP, when the localIntendedRoute is not the same as filed route (flight/agreed/route/@nasRouteText).					
flight/agreed/route/@atcIntendedRoute	ATCIntendedRoute_10c	The ATC Intended Route route attribure contains the current cleared flight plan route with any unacknowledged auto routes (preferential routes, transition fixes and A-line fixes) already applied. The ATC Intended Route includes to-be-applied AARs that are not to be	*fb:FreeTextType*	No	"[A-Z0-9+/*]{2,12}_?\.[A-Z0-9+\./]*\.[A-Z0-9+/*]{2,12}_?(/\d{4})?" Minimum length = 3 Maximum length = 4096		No

DRAFT

Name [FH_FIXM, AH_FIXM, HU_FIXM]	Name in SimpleSchema [FH,AH,HU]	Definition	Type	Complex?	Format/Permissible Values	Example	Required?
		notified in the current center. It is intended for clients that wish to know the currently expected route of the flight across contiguous ERAM airspace. The attribute route/@atcIntendedRoute contains the filed route (route/@nasRouteText) merged with any adapted routes (preferential routes, transition fixes and A-line fixes). Optional route/@atcIntendedRoute is sent to ATM-IPOP, when parameter Merged ATC Intended Route Switch (MARS) is ON and if either one of the following is true: If route/@localIntendedRoute exists and route/@atcIntendedRoute is not the same as route/@localIntendedRoute If route/@localIntendedRoute does not exist and route/@atcIntendedRoute is not the same as route/@nasRouteText.					

•

DRAFT

5.5.1.5 Flight Amendment Information [AH] – Data Elements

See Data Elements for Flight Plan [FH]: Section 5.5.1.3.

5.5.1.6 Flight Amendment Information [AH] – Diagram

See Diagram for Flight Plan [FH]: Section 5.5.1.3.

5.5.1.7 Flight Amendment Information in FIXM Format [AH_FIXM] – Data Elements

See Data Elements for Flight Plan in FIXM Format [FH_FIXM]: Section 5.5.1.4.

5.5.1.8 Converted Route Information [HX] - Data Elements

Element Name [HX]	Element Definition	Type	Complex?	Format/Permissible Values	Example	Required?
sourceId_00e	This element specifies the source identification that includes a UTC time followed by a four-digit sequence number.	string	No	**"\d{10}"** Ten digits, of which the first 6 digits represent the UTC time (*hhmmss*) and the last four-digits, represent the message sequence number in the range [0000-9999].	**2359359001** where the first 6 digits are the UTC time (23:59:35 UTC) and the last 4 digits are sequence number of the message (9001).	Yes
sourceTime_00e1	This element specifies the time component of the previous element, sourceId_00e.	string	No	**"[0-2]\d_[0-5]\d_[0-5]\d"** Time in the format *hh_mm_ss,* where: *hh* stands for the 2-digit-hour in the range 00-23, *mm* stands for the 2-digit minutes in the range 00-59, and *ss* stands for the 2-digit seconds in the range 00-59.	**23_59_35** that represents 23:59:35 UTC	Yes
sourceSeqNo_00e2	This element specifies the message sequence number component of the	string	No	**"\d{4}"** Four-digit number in the range [0000-	**9001**	Yes

Element Name [HX]	Element Definition	Type	Complex?	Format/Permissible Values	Example	Required?
	sourceId_00e element.			9999].		
flightId_02a	Aircraft ID, or flight ID (also called Call Sign).	string	No	**"\+?[A-Z][A-Z0-9]{1,6}"** One uppercase alphabetic character followed by one to six alphanumeric characters.	**AAL20**	Yes
computerId_02d	ERAM Computer Identification (Computer ID).	string	No	**"([0-9][A-HJ-NP-Z0-9]{2})|** **([0-9]{2}[A-HJ-NP-Z0-9])"** The element includes a digit, followed by two alphanumeric characters with the exception of the letters **I** and **O.**	**020**	No
sspId_167a	Site Specific Plan Identifier. It is assigned by IFPA to uniquely identify a flight plan in each ERAM facility.	string	No	**"\d{1,4}"** One to four-digits.	**24**	No
fixTimes	This element specifies the fix and calculated time of arrival at each fix that describes the aircraft's ERAM converted route of flight.		Yes	Sequence of *fixTime_68c* elements. Minimum number of elements = 3. Maximum number of elements = 326		Yes
fixTime_68c	This element contains a fix and the expected time of arrival at the fix in hours and minutes.	string	No	**"([A-Z0-9]{2,5}/\d{4}) |** **([A-Z0-9]{2,5}\d{6}/\d{4}) |** **(\d{4}[A-Z]?/\d{4,5}[A-Z]?/\d{4}) "** The format consists of a valid representation of a fix (see element coordFix_06a in the FH message table), followed by a virgule, and is followed by time in *hhmm* format. Minimum length = 7 Maximum length = 17	**LFT/1800** **JIMIE004034/1320**	Yes
fixAndTime	If it is included in the message, this element specifies the fix and calculated time of arrival at each fix that describes the aircraft's ERAM converted route of flight. The fix and		Yes	Sequence of elements *fix_68c1* and *crossingTime_68c2*, specified between 3 and 326 times.		No

DRAFT

Element Name [HX]	Element Definition	Type	Complex?	Format/Permissible Values	Example	Required?
	time of arrival at the fix are specified in a format that breaks down the fix and the time in separate elements: fix_68c1 and crossingTime_68c2.					
fix_68c1	This element specifies the fix component of the element *fixTime_68c*.	string	No	**"([A-Z0-9]{2,5})| ([A-Z0-9]{2,5}\d{6}) | (\d{4}[A-Z]?/\d{4,5}[A-Z]?)| ([A-Z0-9]{3,4}}"** The format consists of a valid representation of a fix (see element coordFix_06a in the FH message table).	**KDFW 3500N/04000W**	No
crossingTime_68c2	This element specifies the time component of the element *fixTime_68c*.	dateTime	No	The format is *dateTime*, and not *hhmm* as it is in the *fixTime_68c* element.	**2014-06-20T20:17:52**	No

DRAFT

5.5.1.9 Converted Route Information [HX]- Diagram

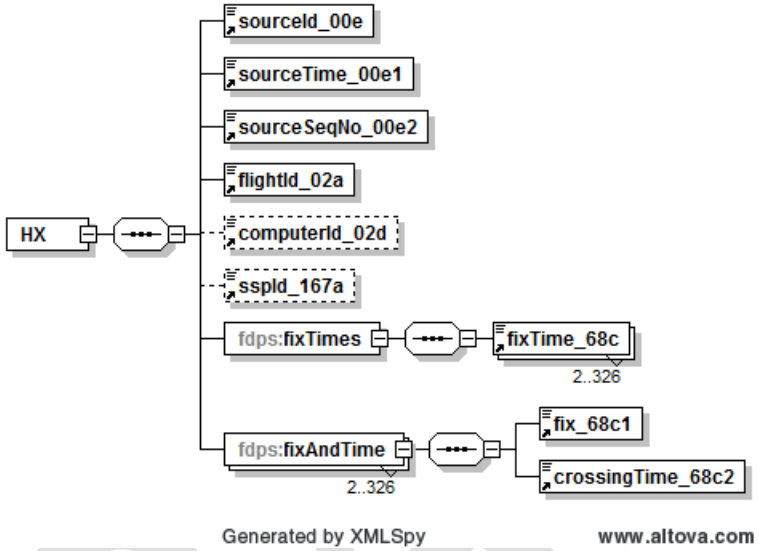

5.5.1.10 Converted Route Information FIXM format (HX_FIXM) – Data Elements

The following elements of the HX message in Simple XML format are not used in the FIXM format of the message:

- sourceId_00e
- sourceTime_00e1
- sourceSeqNo_00e2
- FixTimes
- fixTime_68c

Name [HX_FIXM]	Name [HX]	Element Definition	Type	Complex?	Format/Permissible Values	Example	Required?
flight/supplementalData/additionalFlightInformation/nameValue/@name flight/supplementalData/additionalFlightInformation/nameValue/@value	FDPS_SequenceNo	Sequence number assigned by SFDPS to each message it receives from HADDS. The attribute *name* includes the constant string "MSG_SEQ_NO", and the attribute *value* contains the sequence number value.	fb:FreeTextType	No	”MSG_SEQ_NO” xs:nonNegativeInteger xs:maxInclusive value="999999999"	name="MSG_SEQ_NO" value="6860416"	Yes
flight/departure/@departurePoint	FDPS_Origin/departurePoint_26a	Attribute used to specify the first point or other initial entity where the air traffic control/management system route starts.	fb:FreeTextType	No	xs:string minLength=2, maxLength=12 **"([A-Z0-9]{2,5}) | ([A-Z0-9]{2,5}\d{6}) | (\d{4}[A-Z]?/\d{4,5}[A-Z]?)”** Any of the standard ways to represent a fix can be used for this element (fix name, lat/long, or fix-radial-distance), including the standard airport designators.	**AB** **DFW** **KDFW** **SHP090015** **ATOKA300040** **3500N/04000W**	No
flight/arrival/@arrivalPoint	destination_27a	The final point or other final entity where the air traffic	fb:FreeTextType	No	xs:string minLength=2, maxLength=12 **"([A-Z0-9]{2,5}) |**	**AB** **DFW** **KDFW**	No

Name [HX_FIXM]	Name [HX]	Element Definition	Type	Complex?	Format/Permissible Values	Example	Required?
		control/management system route terminates.			**([A-Z0-9]{2,5}\d{6}) | (\d{4}[A-Z]?/\d{4,5}[A-Z]?)"** Any of the standard ways to represent a fix can be used for this element (fix name, lat/long, or fix-radial-distance), including the standard airport designators.	**SHP090015 ATOKA300040 3500N/04000W**	
flight/operator/operatingOrganization/organization/@name	FDPS_FlightOperator/OPRIndicator_918f	Attribute used to specify the full official name of the State, Organization, Authority, aircraft operating agency, handling agency engaged in or offering to engage in aircraft operation.	ff:TextNameType	No	xs:string	UAL	No
flight/flightIdentification/@aircraftIdentification	flightId_02a	Name used by Air Traffic Services units to identify and communicate with an aircraft.	fb:FlightIdentifierType	No	**"[A-Z0-9]{7}"**	**AAL20**	Yes
flight/supplementalData/additionalFlightInformation/nameValue/@name flight/supplementalData/additionalFlightInformation/nameValue/@value		The flight supplemental data is used to indicate that a flight message is a test message, by setting the attribute *name* to "**SIMULATED_FLIGHT**" and the attribute *value* to "**true**".	*@name:* *@value*: *fb:FreeTextType*	No	*@name:* **"[A-Z0-9_]{1,20}"** *@value:* **xs:string minLength=1, maxLength=100** @name = **"SIMULATED_FLIGHT"** @value = **"true"**	@name = **"SIMULATED_FLIGHT"** @value = **"true"**	No
flight/@system	propSourceSystem	This attribute indicates which SFDPS system generated the message.	fb:ProvenanceSystemType	No	xs:string maxLength=128	FDPS1	Yes

DRAFT

Name [HX_FIXM]	Name [HX]	Element Definition	Type	Complex?	Format/Permissible Values	Example	Required?
flight/@timestamp	propRcvdTime	This attribute conatins the time at which the message was received by SFDPS.	ff:TimeType	No	xs:dateTime	2015-12-18T22:19:02.028Z	Yes
flight/@centre	center	This attribute specifies the code of the ARTCC (or FIR) that produced the data.	fb:ProvenanceCentreType	No	xs:string	ZAU	Yes
flight/arrival/runwayPositionAndTime/runwayTime/[estimated|actual]/@time	arrivalTime	This attribute specifies the proposed or the actual time of arrival at destination, set according to the flight state.	ff:TimeType	No	xs:dateTime	2014-06-20T20:17:52	Yes
flight/departure/runwayPositionAndTime/runwayTime/[actual|estimated]/@time	departureTime	This element specifies the proposed or actual departure time, set according to the flight state.	ff:TimeType	No	xs:dateTime	2014-06-20T20:17:52	Yes
flight/flightStatus/@fdpsFlightStatus	flightState	This attribute contains the current status of the flight as specified by SFDPS.	nas:SfdpsFlightStatusType	Yes	xs:string "PROPOSED|ACTIVE|COMPLETED|CANCELLED|DROPPED"	ACTIVE	Yes
flight/supplementalData/additionalFlightInformation/nameValue/@name flight/supplementalData/additionalFlightInformation/nameValue/@value	fdpsGufi	The name value pair specifies the SFDPS GUFI, an identifier on every message that positively identifies what flight the message is for.	fb:FreeTextType	No	xs:string @name: "FDPS_GUFI" @value: "us\.fdps\.\d{4}-\d{2}-\d{2}T\d{2}:\d{2}:\d{2}Z\.[A-Za-z0-9/]+"	name="FDPS_GUFI" value="us.fdps.2015-12-18T16:59:10Z.000/14/100"/>	Yes
flight/flightPlan/@identifier	eramGufi_316aFPId	This attribute specifies the unique flight plan identifier.	fb:FreeTextType	No	xs:string "[A-Z]{2}\d{5}[1-7]\d{2}"	"KU68378100"	No

DRAFT

Name [HX_FIXM]	Name [HX]	Element Definition	Type	Complex?	Format/Permissible Values	Example	Required?
flight/gufi	uuidGufi	This element contains a reference that uniquely identifies a flight and that is independent of any particular system. This reference conforms to the Universal Unique Identifier standard.	fb:GloballyFlightIdentifierType		xs:string "[0-9a-fA-F]{8}\-[0-9a-fA-F]{4}\-4[0-9a-fA-F]{3}\-[89aAbB][0-9a-fA-F]{3}\-[0-9a-fA-F]{12}"	4aaf92be-ac0a-4dba-998f-9e56f5d450b6	Yes
flight/flightIdentification/@siteSpecificPlanId	sspId_167a	Site Specific Plan Identifier. It is assigned by Instrument Flight Procedures Automation (IFPA) to uniquely identify a flight plan in each ERAM facility.	fb:CountType	No	**"\d{1,4}"** One to four-digits.	**24**	No
flight/agreed/route/expandedRoute/routePoint/point	fix_68c1	A route may contain an optional expanded route that consists of an ordered list of expanded route points. The expanded route represents the expansion of the route into a list of points which describe the aircraft's expected 2D path from the departure aerodrome to the arrival aerodrome. This element specifies a single point that is part of the aircraft's expanded route of flight.	fb:SignificantPointType (abstract type) *fb:FixPointType/* *ff:GeographicalLocationType/* *fb:RelativePointType*	Yes	- *fb:FixPointType* **"[A-Z0-9]{2,5}"** - *ff:GeographicalLocationType* List of two **xs:double** (latitude followed by longitude) - *fb:RelativePointType* - fix: **"[A-Z0-9]{2,5}"** - distance: *ff:DistanceType* **xs:double** - radial: *fb:DirectionType* **xs:double** minInclusive=0 maxInclusive=360	**KDFW**	No

DRAFT

Name [HX_FIXM]	Name [HX]	Element Definition	Type	Complex?	Format/Permissible Values	Example	Required?
flight/agreed/route/expandedRoute/routePoint/@estimatedTime	crossingTime_68c2	This element specifies the estimated time over the expanded route point.	ff:TimeType	No	xs:dateTime	**2014-06-20T20:17:52**	No

5.5.1.11 Cancellation Information [CL] - Data Elements

Element Name [CL]	Element Definition	Type	Complex?	Format/Permissible Values	Example	Required?
sourceId_00e	This element specifies the source identification that includes a UTC time followed by a four-digit sequence number.	string	No	**"\d{10}"** Ten digits, of which the first 6 digits represent the UTC time (*hhmmss*) and the last four-digits, represent the message sequence number in the range [0000-9999].	**2359359001**, where the first 6 digits are the UTC time (23:59:35 UTC) and the last 4 digits are sequence number of the message (9001).	Yes
sourceTime_00e1	This element specifies the time component of the previous element, sourceId_00e.	string	No	**"[0-2]\d_[0-5]\d_[0-5]\d"** Time in the format *hh_mm_ss,* where: *hh* stands for the 2-digit-hour in the range 00-23, *mm* stands for the 2-digit minutes in the range 00-59, and *ss* stands for the 2-digit seconds in the range 00-59.	**23_59_35** that represents 23:59:35 UTC	Yes
sourceSeqNo_00e2	This element specifies the message sequence number component of the sourceId_00e element.	string	No	**"\d{4}"** Four-digit number in the range [0000-9999].	**9001**	Yes
flightId_02a	Aircraft ID, or flight ID (also called Call Sign).	string	No	**"\+?[A-Z][A-Z0-9]{1,6}"** One uppercase alphabetic character followed by one to six alphanumeric characters.	**AAL20**	Yes

DRAFT

Element Name [CL]	Element Definition	Type	Complex?	Format/Permissible Values	Example	Required?
computerId_02d	ERAM Computer Identification (Computer ID).	string	No	**"([0-9][A-HJ-NP-Z0-9]{2})| ([0-9]{2}[A-HJ-NP-Z0-9])"** The element includes a digit, followed by two alphanumeric characters with the exception of the letters **I** and **O**.	**020**	No
sspId_167a	Site Specific Plan Identifier. It is assigned by IFPA to uniquely identify a flight plan in each ERAM facility.	string	No	**"\d{1,4}"** One to four-digits.	**24**	No
departurePoint_26a	The departure point is the point at which to start processing a flight plan as follows: the departure airport, or the airfile point. When the flight plan represents an airfile, originating within this center area, this element contains the airfile point.	string	No	**"([A-Z0-9]{2,5}) | ([A-Z0-9]{2,5}\d{6}) | (\d{4}[A-Z]?/\d{4,5}[A-Z]?)"** Any of the allowed ways to represent a fix can be used in this field, including the standard airport designators. A fix name, lat/long or fix-radial-distance can also be used.	**AB** **KDFW** **SHP090015** **3500N/04000W**	Yes
destination_27a	The destination is the point where to end processing the flight plan.	string	No	**"([A-Z0-9]{2,5}) | ([A-Z0-9]{2,5}\d{6}) | (\d{4}[A-Z]?/\d{4,5}[A-Z]?)"** Any of the allowed ways to represent a fix can be used in this field, including the standard airport designators. A fix name, lat/long or fix-radial-distance can also be used.	**AB** **KDFW** **SHP090015** **3500N/04000W**	Yes
T_fix	The allowed ways to represent a fix can be used in this field, including the standard airport designators.	string	No	**"([A-Z0-9]{2,5}) | ([A-Z0-9]{2,5}\d{6}) | (\d{4}[A-Z]?/\d{4,5}[A-Z]?)"**	**AB** **KDFW** **SHP090015** **3500N/04000W**	

DRAFT

5.5.1.12 Cancellation Information [CL] – Diagram

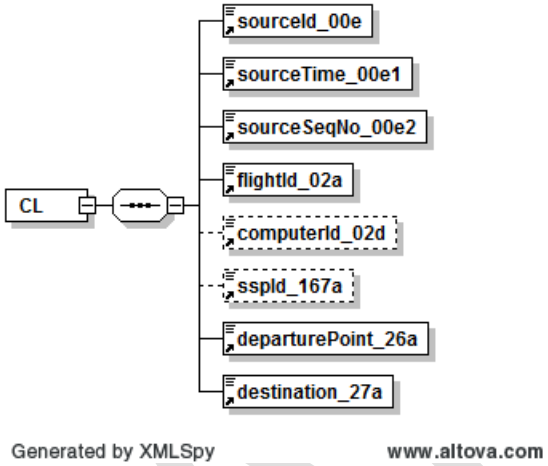

5.5.1.13 Cancellation Information in FIXM Format [CL_FIXM] – Data Elements

The following elements of the CL message in Simple XML format are not used in the FIXM format of the message:

- sourceId_00e
- sourceTime_00e1
- sourceSeqNo_00e2

Name [CL_FIXM]	Name [CL]	Element Definition	Type	Complex?	Format/Permissible Values	Example	Required?
flight/supplementalData/additionalFlightInformation/nameValue/@name flight/supplementalData/additionalFlightInformation/nameValue/@value	FDPS_SequenceNo	Sequence number assigned by SFDPS to each message it receives from HADDS. The attribute *name* includes the constant string "MSG_SEQ_NO", and the attribute *value* contains the sequence number value.	@name and @value: fb:FreeTextType	No	@name: ”MSG_SEQ_NO” @value: xs:nonNegativeInteger xs:maxInclusive	@name="MSG_SEQ_NO" @value="6860416"	Yes

Name [CL_FIXM]	Name [CL]	Element Definition	Type	Complex?	Format/Permissible Values	Example	Required?
					value="999999999"		
flight/operator/operatingOrganization/organization/@name	FDPS_FlightOperator/OPRIndicator_918f	Attribute used to specify the full official name of the State, Organization, Authority, aircraft operating agency, handling agency engaged in or offering to engage in aircraft operation.	ff:TextNameType	No	xs:string	UAL	No
flight/flightIdentification/@aircraftIdentification	flightId_02a	Name used by Air Traffic Services units to identify and communicate with an aircraft.	fb:FlightIdentifierType	No	**"[A-Z0-9]{7}"**	**AAL20**	Yes
flight/supplementalData/additionalFlightInformation/nameValue/@name flight/supplementalData/additionalFlightInformation/nameValue/@value		The flight supplemental data is used to indicate that a flight message is a test message, by setting the attribute *name* to "**SIMULATED_FLIGHT**" and the attribute *value* to "**true**".	*@name:* *@value*: *fb:FreeTextType*	No	*@name:* **"[A-Z0-9_]{1,20}"** *@value:* **xs:string** **minLength=1, maxLength=100** @name = **"SIMULATED_FLIGHT"** @value = **"true"**	@name = **"SIMULATED_FLIGHT"** @value = **"true"**	No
flight/flightIdentification/@computerId	computerId_02d	A unique identification assigned by ERAM to each flight plan.	fb:FreeTextType	No	**"[0-9][A-HJ-NP-Z0-9]{2}"** The element includes a digit, followed by two alphanumeric characters with the exception of the letters **I** and **O**, such as *ddd, ddL, dLd, dLL*.	**020**	No
flight/flightIdentification/@siteSpecificPlanId	sspId_167a	Site Specific Plan Identifier. It is assigned by Instrument Flight Procedures Automation (IFPA) to uniquely identify a flight plan in each ERAM facility.	fb:CountType	No	**"\d{1,4}"** One to four-digits.	**24**	No
flight/departure/@departurePoint	departurePoint_26a	It is used to specify the first point or other initial entity where the air traffic control/management system route starts.	fb:FreeTextType	No	xs:string minLength=2, maxLength=12	**AB** **DFW** **KDFW**	Yes

DRAFT

Name [CL_FIXM]	Name [CL]	Element Definition	Type	Complex?	Format/Permissible Values	Example	Required?
					"([A-Z0-9]{2,5}) | ([A-Z0-9]{2,5}\d{6}) | (\d{4}[A-Z]?/\d{4,5}[A-Z]?)" Any of the standard ways to represent a fix can be used for this element (fix name, lat/long, or fix-radial-distance), including the standard airport designators.	**SHP090015 ATOKA300040 3500N/04000W**	
flight/arrival/@arrivalPoint	destination_27a	The final point or other final entity where the air traffic control/management system route terminates.	fb:FreeTextType	No	**xs:string** minLength=2, maxLength=12 **"([A-Z0-9]{2,5}) | ([A-Z0-9]{2,5}\d{6}) | (\d{4}[A-Z]?/\d{4,5}[A-Z]?)"** Any of the standard ways to represent a fix can be used for this element (fix name, lat/long, or fix-radial-distance), including the standard airport designators.	**AB DFW KDFW SHP090015 ATOKA300040 3500N/04000W**	Yes

5.5.1.14 Departure Information [DH] - Data Elements

Element Name [DH]	Element Definition	Type	Complex?	Format/Permissible Values	Example	Required?
sourceId_00e	This element specifies the	string	No	**"\d{10}"**	**2359359001**, where	Yes

DRAFT

Element Name [DH]	Element Definition	Type	Complex?	Format/Permissible Values	Example	Required?
	source identification that includes a UTC time followed by a four-digit sequence number.			Ten digits, of which the first 6 digits represent the UTC time (*hhmmss*) and the last four-digits, represent the message sequence number in the range [0000-9999].	the first 6 digits are the UTC time (23:59:35 UTC) and the last 4 digits are sequence number of the message (9001).	
sourceTime_00e1	This element specifies the time component of the previous element, sourceId_00e.	string	No	**"[0-2]\d_[0-5]\d_[0-5]\d"** Time in the format *hh_mm_ss*, where: *hh* stands for the 2-digit-hour in the range 00-23, *mm* stands for the 2-digit minutes in the range 00-59, and *ss* stands for the 2-digit seconds in the range 00-59.	**23_59_35** that represents 23:59:35 UTC	Yes
sourceSeqNo_00e2	This element specifies the message sequence number component of the sourceId_00e element.	string	No	**"\d{4}"** Four-digit number in the range [0000-9999].	**9001**	Yes
flightId_02a	Aircraft ID, or flight ID (also called Call Sign).	string	No	**"\+?[A-Z][A-Z0-9]{1,6}"** One uppercase alphabetic character followed by one to six alphanumeric characters.	**AAL20**	Yes
computerId_02d	ERAM Computer Identification (Computer ID).	string	No	**"([0-9][A-HJ-NP-Z0-9]{2})|([0-9]{2}[A-HJ-NP-Z0-9])"** The element includes a digit, followed by two alphanumeric characters with the exception of the letters **I** and **O**.	**020**	No
sspId_167a	Site Specific Plan Identifier. It is assigned by IFPA to uniquely identify a flight plan in each ERAM facility.	string	No	**"\d{1,4}"** One to four-digits.	**24**	No
numberOfAircraft_03a	This element includes the number of aircraft for the flight	string	No	**"\d{0,2}[A-Z]?"** The element consists of zero to two	**3H** The number of	No

DRAFT

Element Name [DH]	Element Definition	Type	Complex?	Format/Permissible Values	Example	Required?
	followed optionally by the Special Aircraft Indicator.			digits optionally followed by one uppercase letter to represent the Special Aircraft Indicator. The indicator can also appear on its own (without the leading digits).	aircraft is 3 and the special aircraft indicator is **H** for Heavy Jet.	
typeOfAircraft_03c	Type of aircraft.	string	No	**"[A-Z][A-Z0-9]{1,3}"** The element consists of one letter followed by one to three alphanumeric characters.	**B747**	Yes
airborneEquip_03e	Airborne equipment qualifier. It consists of one alphanumeric character.	string	No	**"[A-Z]"** The element consists of one alphanumeric character, that can have one of the following values: **A** - Transponder with no Mode C **B** - Transponder with Mode C **E** –FMS with DME/DME and IRU position updating **G** – GNSS, including GPS or WAAS, with en-route and terminal capability **X** – No transponder **W** - RVSM	**E**	No
departurePoint_26a	The departure point is the point at which to start processing a flight plan as follows: the departure airport, or the airfile point. When the flight plan represents an airfile, originating within this center area, this element contains the airfile point.	string	No	**"([A-Z0-9]{2,5}) | ([A-Z0-9]{2,5}\d{6}) | (\d{4}[A-Z]?/\d{4,5}[A-Z]?)"** Any of the allowed ways to represent a fix can be used in this field, including the standard airport designators. A fix name, lat/long or fix-radial-distance can also be used.	**AB** **KDFW** **SHP090015** **3500N/04000W**	Yes
coordStatusTime_07d	Coordination time that represents the starting time in hours and minutes at the coordination fix.	string	No	**"((A|D|E|P|F)[0-1][0-9][0-5][0-9) | ((A|D|E|P|F)2[0-3][0-5][0-9])"** The element includes one letter (possible values are **A**, **D, E**, **P**, or **F**) followed by four-digits that represent time as *hhmm*.	**P1020**	Yes

Element Name [DH]	Element Definition	Type	Complex?	Format/Permissible Values	Example	Required?
coordStatus_07d1	The coordStatus field is the single letter **A**, **D**, **E**, **F**, or **P**, as described for element coordStatusTime_07d.	string	No	**"(A|D|E|P|F)"**	**F**	Yes
coordTime_07d2	Starting time at the coordination fix.	dateTime	No		**2014-06-20T20:17:52**	Yes
destination_27a	The destination is the point where to end processing the flight plan.	string	No	**"([A-Z0-9]{2,5}) | ([A-Z0-9]{2,5}\d{6}) | (\d{4}[A-Z]?/\d{4,5}[A-Z]?)"** Any of the allowed ways to represent a fix can be used in this field, including the standard airport designators. A fix name, lat/long or fix-radial-distance can also be used.	**AB** **KDFW** **SHP090015** **3500N/04000W**	Yes
ETA_28a	Estimated Time of Arrival (ETA) at destination in hours and minutes. ETA supplied only if the Estimated Time Enroute (ETE) was filed with the flight plan.	string	No	**"\d{4}"** Four-digits representing time in format *hhmm*.	**1720**	No

DRAFT

5.5.1.15 Departure Information [DH] - Diagram

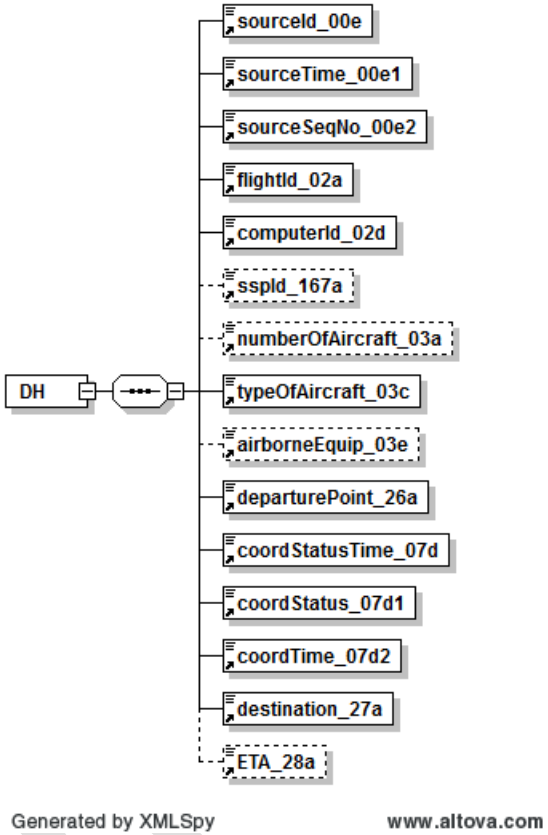

5.5.1.16 Departure Information Message in FIXM Format [DH_FIXM] – Data Elements

The following elements of the DH message in Simple XML format are not traslated in the FIXM format of the message:

- sourceId_00e
- sourceTime_00e1
- sourceSeqNo_00e2
- coordStatusTime_07d

Name [DH_FIXM]	Name [DH]	Element Definition	Type	Complex?	Format/Permissible Values	Example	Required?
flight/supplementalData/additionalFlightInformation/nameValue/@name flight/supplementalData/additionalFlightInformation/nameValue/@value	FDPS_SequenceNo	Sequence number assigned by SFDPS to each message it receives from HADDS. The attribute *name* includes the constant string "MSG_SEQ_NO", and the attribute *value* contains the sequence number value.	@name and @value: fb:FreeTextType	No	@name: ”MSG_SEQ_NO” @value: xs:nonNegativeInteger xs:maxInclusive value="999999999"	@name="MSG_SEQ_NO" @value="6860416"	Yes
flight/operator/operatingOrganization/organization/@name	FDPS_FlightOperator/OPRIndicator_918f	Attribute used to specify the full official name of the State, Organization, Authority, aircraft operating agency, handling agency engaged in or offering to engage in aircraft operation.	ff:TextNameType	No	xs:string	UAL	No
flight/@system	propSourceSystem	This attribute indicates which SFDPS system generated the message.	fb:ProvenanceSystemType	No	xs:string maxLength=128	FDPS1	Yes
flight/@timestamp	propRcvdTime	This attribute conatins the time at which the message was received by SFDPS.	ff:TimeType	No	xs:dateTime	2015-12-18T22:19:02.028Z	Yes
flight/@centre	center	This attribute specifies the code of the ARTCC (or FIR) that produced the data.	fb:ProvenanceCentreType	No	xs:string	ZAU	Yes
flight/departure/runwayPositionAndTime/runwayTime/actual/@time	departureTime	This element specifies the actual departure time.	ff:TimeType	No	xs:dateTime	2014-06-20T20:17:52	Yes

Name [DH_FIXM]	Name [DH]	Element Definition	Type	Complex?	Format/Permissible Values	Example	Required?
flight/flightStatus/@fdpsFlightStatus	flightState	This attribute contains the current status of the flight as specified by SFDPS.	nas:SfdpsFlightStatusType	Yes	xs:string "PROPOSED|ACTIVE|COMPLETED|CANCELLED|DROPPED"	ACTIVE	Yes
flight/supplementalData/additionalFlightInformation/nameValue/@name flight/supplementalData/additionalFlightInformation/nameValue/@value	fdpsGufi	The name value pair specifies the SFDPS GUFI, an identifier on every message that positively identifies what flight the message is for.	fb:FreeTextType	No	xs:string @name: "FDPS_GUFI" @value: "us\.fdps\.\d{4}-\d{2}-\d{2}T\d{2}:\d{2}:\d{2}Z\.[A-Za-z0-9/]+"	name="FDPS_GUFI" value="us.fdps.2015-12-18T16:59:10Z.000/14/100"/>	Yes
flight/flightPlan/@identifier	eramGufi_316aFPId	This attribute specifies the unique flight plan identifier.	fb:FreeTextType	No	xs:string "[A-Z]{2}\d{5}[1-7]\d{2}"	"KU68378100"	No
flight/gufi	uuidGufi	This element contains a reference that uniquely identifies a flight and that is independent of any particular system. This reference conforms to the Universal Unique Identifier standard.	fb:GloballyFlightIdentifierType		xs:string "[0-9a-fA-F]{8}\-[0-9a-fA-F]{4}\-4[0-9a-fA-F]{3}\-[89aAbB][0-9a-fA-F]{3}\-[0-9a-fA-F]{12}"	4aaf92be-ac0a-4dba-998f-9e56f5d450b6	Yes
flight/flightIdentification/@aircraftIdentification	flightId_02a	Name used by Air Traffic Services units to identify and communicate with an aircraft.	fb:FlightIdentifierType	No	**"[A-Z0-9]{7}"**	**AAL20**	Yes
flight/supplementalData/additionalFlightInformation/nameValue/@name flight/supplementalData/additionalFlightInformation/nameValue/@value		The flight supplemental data is used to indicate that a flight message is a test message, by setting the attribute *name* to "**SIMULATED_FLIGHT**" and the attribute *value* to "**true**".	*@name:* *@value*: fb:FreeTextType	No	*@name:* **"[A-Z0-9_]{1,20}"** *@value:* **xs:string** **minLength=1, maxLength=100** @name = **"SIMULATED_FLIGHT"** @value = **"true"**	@name = **"SIMULATED_FLIGHT"** @value = **"true"**	No
flight/flightIdentification/@computerId	computerId_02d	A unique identification assigned by ERAM to each flight plan.	fb:FreeTextType	No	**"([0-9][A-HJ-NP-Z0-9]{2})|([0-9]{2}[A-HJ-NP-Z0-9])"** The element includes a digit, followed by two alphanumeric characters with the exception of the letters **I** and **O**, such as *ddd,*	**020**	No

DRAFT

Name [DH_FIXM]	Name [DH]	Element Definition	Type	Complex?	Format/Permissible Values	Example	Required?
					ddL, dLd, dLL.		
flight/flightIdentification/@siteSpecificPlanId	sspId_167a	Site Specific Plan Identifier. It is assigned by Instrument Flight Procedures Automation (IFPA) to uniquely identify a flight plan in each ERAM facility.	fb:CountType	No	**"\d{1,4}"** One to four-digits.	**24**	No
flight/aircraftDescription/@aircraftQuantity	numberOfAircraft_03a	Number of aircraft flying in formation in which the aircrafts are governed by one flight plan.	fb:countType	No	**"\d{0,2}"** The element consists of zero to two digits.	**3**	No
flight/aircraftDescription/@tfmsSpecialAircraftQualifier	numberOfAircraft_03a-SpecialAircraftIndicator	This element includes the Special Aircraft Indicator. It indicates the flight is a heavy jet, B757 or, if not present, a large jet and if the flight is either equipped or not with TCAS. This indicator is used for output purposes such as strip printing and message transfers to other facilities such as Automated Radar Terminal System (ARTS). NOTE TFMS Special Aircraft Qualifier is a bad fit to Special Aircraft Indicator but no other fields seem to fit.	nas:NasSpecialAircraftQualifierType	No	**"HEAVY_JET|TCAS|B757|HEAVY_JET_AND_TCAS"** **"HEAVY_JET"** = Capable of takeoff weights of 300,000 pounds or more **"TCAS"** = Traffic collision avoidance system or traffic alert and collision avoidance system **"B757"** = Controllers are required to apply the special wake turbulence separation criteria for the Boeing 757. **"HEAVY_JET_AND_TCAS"** = Capable of takeoff weights of 300,000 pounds or more and traffic collision avoidance system.	**HEAVY_JET**	No
flight/aircraftDescription/aircraftType/icaoModelIdentifier	typeOfAircraft_03c	The ICAO code of the aircraft type.	fb:IcaoAircraftIdentifierType	No	**"[A-Z][A-Z0-9]{1,3}"** The element consists of one letter followed by one to three alphanumeric characters.	**B747**	Yes

DRAFT

Name [DH_FIXM]	Name [DH]	Element Definition	Type	Complex?	Format/Permissible Values	Example	Required?
flight/aircraftDescription/@equipmentQualifier	airborneEquip_03e	Airborne equipment qualifier. A value assigned to the aircraft, based on its navigational equipment, whether or not it has a transponder, and if it has a transponder, whether the transponder supports Mode C.	nas:NasAirborneEquipmentQualifierType	No	**" [ABCDGHILMNPSTUVWXYZ]"** The element consists of one alphanumeric character, that can have one of the following values: • "X"= No RVSM, No DME, No transponder • "T"= No RVSM, No DME, Transponder with no mode C • "U"= No RVSM, No DME: Transponder with mode C • "D"= DME: No transponder • "B"= DME: Transponder with no mode C • "A"= DME: Transponder with mode • "M"= TACAN ONLY: No transponder • "N"= TACAN ONLY: Transponder with no mode C • "P"= TACAN ONLY: Transponder with mode C • "C"= "Y"= LORAN,VORDME,INS,RNAV: No transponder • "I"= LORAN,VORDME,INSRNAV: Transponder with mode C • "H"= RVSM, Failed transponder or Failed Mode C capability • "S=ADVANCED RNAV, TRANSPONDER, MODE C:	**E**	No

DRAFT

Name [DH_FIXM]	Name [DH]	Element Definition	Type	Complex?	Format/Permissible Values	Example	Required?
					FMS with DMEDME position updating • "G"= ADVANCED RNAV, TRANSPONDER, MODE C: Global Navigation Satellite System (GNSS), including GPS or Wide Area Augmentation System (WAAS), with enroute and terminal capability • "V"= ADVANCED RNAV, TRANSPONDER, MODE C: Required Navigational Performance (RNP). The aircraft meets the RNP type prescribed for the route segments, routes and/or area concerned. • "Z"= REDUCED VERTICAL SEPARATION MINIMUM (RVSM): E with RVSM • "L"= REDUCED VERTICAL SEPARATION MINIMUM (RVSM): G with RVSM "W"= REDUCED VERTICAL SEPARATION MINIMUM (RVSM): RVSM		
flight/departure/@departurePoint	departurePoint_26a	It is used to specify the first point or other initial entity where the air traffic control/management system route starts.	fb:FreeTextType	No	xs:string minLength=2, maxLength=12 **"([A-Z0-9]{2,5}) | ([A-Z0-9]{2,5}\d{6}) | (\d{4}[A-Z]?/\d{4,5}[A-Z]?)"** Any of the standard ways to represent a fix can be used for this element (fix name, lat/long, or fix-radial-distance), including the	**AB** **DFW** **KDFW** **SHP090015** **ATOKA300040** **3500N/04000W**	Yes

DRAFT

Name [DH_FIXM]	Name [DH]	Element Definition	Type	Complex?	Format/Permissible Values	Example	Required?
					standard airport designators.		
flight/coordination/@coordinationTimeHandling	coordStatus_07d1	The indicator for the type of Coordination Time.	nas:CoordinationTimeType	No	**"(P|D|E|A)"** **"P"** = Proposed flight plan. **"D"** = Aircraft has departed from the departure airport. **"E"** = Active aircraft. **"A"** = Aircraft arrived at the destination airport.	**P**	Yes
flight/coordination/@coordinationTime	coordTime_07d2	Coordination Time: the time to be used in conjunction with the Coordination Fix so processing for this flight can be synchronized for the next sector/facility.	ff:TimeType	No	**xs:dateTime**	**2014-06-20T20:17:52**	Yes
flight/arrival/@arrivalPoint	destination_27a	The final point or other final entity where the air traffic control/management system route terminates.	fb:FreeTextType	No	**xs:string** minLength=2, maxLength=12 **"([A-Z0-9]{2,5}) | ([A-Z0-9]{2,5}\d{6}) | (\d{4}[A-Z]?/\d{4,5}[A-Z]?)"** Any of the standard ways to represent a fix can be used for this element (fix name, lat/long, or fix-radial-distance), including the standard airport designators.	**AB** **DFW** **KDFW** **SHP090015** **ATOKA300040** **3500N/04000W**	Yes
flight/arrival/runwayPositionAndTime/runwayTime/estimated/@time	ETA_28a	Estimated Time of Arrival (ETA) at destination. ETA supplied only if the Estimated Time Enroute (ETE) was filed with the flight plan.	ff:TimeType	No	**xs:dateTime**	**2014-06-20T20:17:52**	No

DRAFT

5.5.1.17 Aircraft Identification Amendment Information [IH] - Data Elements

Element Name [IH]	Element Definition	Type	Complex?	Format/Permissible Values	Example	Required?
sourceId_00e	This element specifies the source identification that includes a UTC time followed by a four-digit sequence number.	string	No	**"\d{10}"** Ten digits, of which the first 6 digits represent the UTC time (*hhmmss*) and the last four-digits, represent the message sequence number in the range [0000-9999].	**2359359001** where the first 6 digits are the UTC time (23:59:35 UTC) and the last 4 digits represent the sequence number of the message (9001).	Yes
sourceTime_00e1	This element specifies the time component of the previous element, sourceId_00e.	string	No	**"[0-2]\d_[0-5]\d_[0-5]\d"** Time in the format *hh_mm_ss*, where: *hh* stands for the 2-digit-hour in the range 00-23, *mm* stands for the 2-digit minutes in the range 00-59, and *ss* stands for the 2-digit seconds in the range 00-59.	**23_59_35** that represents 23:59:35 UTC	Yes
sourceSeqNo_00e2	This element specifies the message sequence number component of the sourceId_00e element.	string	No	**"\d{4}"** Four-digit number in the range [0000-9999].	9001	Yes
flightId_02a	Aircraft ID, or flight ID (also called Call Sign).	string	No	**"\+?[A-Z][A-Z0-9]{1,6}"** One uppercase alphabetic character followed by one to six alphanumeric characters.	**AAL20**	Yes
computerId_02d	ERAM Computer Identification (Computer ID).	string	No	**"([0-9][A-HJ-NP-Z0-9]{2})| ([0-9]{2}[A-HJ-NP-Z0-9])"** The element includes a digit, followed by two alphanumeric characters with the exception of the letters **I** and **O**.	**020**	No
sspId_167a	Site Specific Plan Identifier. It is assigned by IFPA to uniquely identify a flight plan in each ERAM	string	No	**"\d{1,4}"** One to four-digits.	**24**	No

DRAFT

Element Name [IH]	Element Definition	Type	Complex?	Format/Permissible Values	Example	Required?
	facility.					
newFlightId_02aN	The new Aircraft ID, or flight ID (also called Call Sign), that has been changed by the IH message.	string	No	**"\+?[A-Z][A-Z0-9]{1,6}"** It has a variable format, starting with one uppercase alphabetic character, followed by one to six alphanumeric characters. When it is only two characters long, the format must be one letter followed by one digit, such as **A1** for Air Force One.	**DAL52**	Yes
newComputerId_02dN	This element contains the new Computer ID that has been changed by the IH message.	string	No	**"([0-9][A-HJ-NP-Z0-9]{2}) |** **([A-HJ-NP-Z]{3}) |** **([0-9]{2}[A-HJ-NP-Z0-9])"** The computer ID is represented by three alphanumeric characters, as specified by the pattern above The letters I and **O** are prohibited. One special all alphabetic code may be used, literally, XXX. This is only used in DA (Data Accept) messages in response to an ARTS VFR flight plan input.	**436**	No
newSspId_167aN	This element contains the new Site Specific Plan Identifier that has been changed by the IH message.	string	No	**"\d{1,4}"** The format consists of one- to four-digit string in a range from 0 – 4000.		No
departurePoint_26a	The departure point is the point at which to start processing a flight plan as follows: the departure airport, or the airfile point. When the flight plan represents an airfile, originating within this center area, this element contains the airfile point.	string	No	**"([A-Z0-9]{2,5}) |** **([A-Z0-9]{2,5}\d{6}) |** **(\d{4}[A-Z]?/\d{4,5}[A-Z]?)"** Any of the allowed ways to represent a fix can be used in this field, including the standard airport designators. A fix name, lat/long or fix-radial-distance can also be used.	**AB** **KDFW** **SHP090015** **3500N/04000W**	Yes
destination_27a	The destination is the point where to end processing the flight plan.	string	No	**"([A-Z0-9]{2,5}) |** **([A-Z0-9]{2,5}\d{6}) |** **(\d{4}[A-Z]?/\d{4,5}[A-Z]?)"**	**AB** **KDFW** **SHP090015**	Yes

DRAFT

Element Name [IH]	Element Definition	Type	Complex?	Format/Permissible Values	Example	Required?
				Any of the allowed ways to represent a fix can be used in this field, including the standard airport designators. A fix name, lat/long or fix-radial-distance can also be used.	**3500N/04000W**	

5.5.1.18 Aircraft Identification Amendment Information [IH] - Diagram

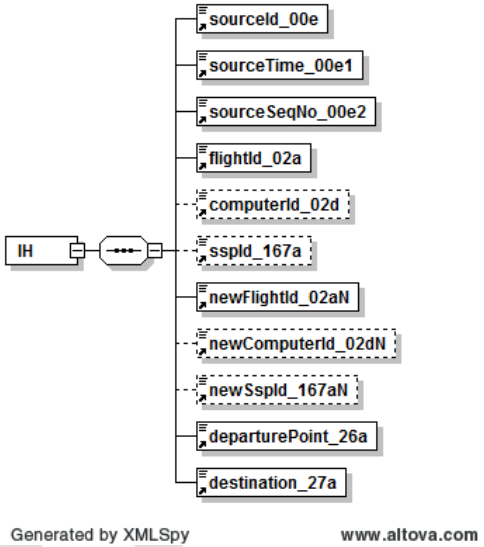

5.5.1.19 Flight Identification Amendment Information Message in FIXM Format [IH_FIXM] – Data Elements

The following elements of the IH message in Simple XML format are not translated in the FIXM format of the message:

- sourceId_00e

- sourceTime_00e1
- sourceSeqNo_00e2

Name [IH_FIXM]	Name [IH]	Element Definition	Type	Complex?	Format/Permissible Values	Example	Required?
flight/supplementalData/additionalFlightInformation/nameValue/@name flight/supplementalData/additionalFlightInformation/nameValue/@value	FDPS_SequenceNo	Sequence number assigned by SFDPS to each message it receives from HADDS. The attribute name includes the constant string "MSG_SEQ_NO", and the attribute value contains the sequence number value.	@name: @value: fb:FreeTextType	No	@name: ”MSG_SEQ_NO” @value: xs:nonNegativeInteger xs:maxInclusive value="999999999"	@name="MSG_SEQ_NO" @value="6860416"	Yes
flight/operator/operatingOrganization/organization/@name	FDPS_FlightOperator/OPRIndicator_918f	Attribute used to specify the full official name of the State, Organization, Authority, aircraft operating agency, handling agency engaged in or offering to engage in aircraft operation.	ff:TextNameType	No	xs:string	UAL	No
flight/@system	propSourceSystem	This attribute indicates which SFDPS system generated the message.	fb:ProvenanceSystemType	No	xs:string maxLength=128	FDPS1	Yes
flight/@timestamp	propRcvdTime	This attribute conatins the time at which the message was received by SFDPS.	ff:TimeType	No	xs:dateTime	2015-12-18T22:19:02.028Z	Yes
flight/@centre	center	This attribute specifies the code of the ARTCC (or FIR) that produced the data.	fb:ProvenanceCentreType	No	xs:string	ZAU	Yes
flight/arrival/runwayPositionAndTime/runwayTime/[estimated|actual]/@time	arrivalTime	This attribute specifies the proposed or the actual time of arrival at destination, set according to the flight state.	ff:TimeType	No	xs:dateTime	2014-06-20T20:17:52	Yes
flight/departure/runwayPositionAndTime/runwayTime/[actual|estimated]/@time	departureTime	This element specifies the proposed or actual departure time, set according to the flight state.	ff:TimeType	No	xs:dateTime	2014-06-20T20:17:52	Yes

DRAFT

Name [IH_FIXM]	Name [IH]	Element Definition	Type	Complex?	Format/Permissible Values	Example	Required?
flight/flightStatus/@fdpsFlightStatus	flightState	This attribute contains the current status of the flight as specified by SFDPS.	nas:SfdpsFlightStatusType	Yes	xs:string “PROPOSED|ACTIVE|COMPLETED|CANCELLED|DROPPED”	ACTIVE	Yes
flight/supplementalData/additionalFlightInformation/nameValue/@name flight/supplementalData/additionalFlightInformation/nameValue/@value	fdpsGufi	The name value pair specifies the SFDPS GUFI, an identifier on every message that positively identifies what flight the message is for.	fb:FreeTextType	No	xs:string @name: "FDPS_GUFI" @value: "us\.fdps\.\d{4}-\d{2}-\d{2}T\d{2}:\d{2}:\d{2}Z\.[A-Za-z0-9/]+"	name="FDPS_GUFI" value="us.fdps.2015-12-18T16:59:10Z.000/14/100"/>	Yes
flight/flightPlan/@identifier	eramGufi_316aFPId	This attribute specifies the unique flight plan identifier.	fb:FreeTextType	No	xs:string "[A-Z]{2}\d{5}[1-7]\d{2}"	"KU68378100"	No
flight/gufi	uuidGufi	This element contains a reference that uniquely identifies a flight and that is independent of any particular system. This reference conforms to the Universal Unique Identifier standard.	fb:GloballyFlightIdentifierType		xs:string "[0-9a-fA-F]{8}\-[0-9a-fA-F]{4}\-4[0-9a-fA-F]{3}\-[89aAbB][0-9a-fA-F]{3}\-[0-9a-fA-F]{12}"	4aaf92be-ac0a-4dba-998f-9e56f5d450b6	Yes
flight/flightIdentificationPrevious/@computerId	computerId_02d	A unique identification assigned by ERAM to each flight plan prior to the modification included in the IH_FIXM message.	fb:FreeTextType	No	**"([0-9][A-HJ-NP-Z0-9]{2})| ([0-9]{2}[A-HJ-NP-Z0-9])"** The element includes a digit, followed by two alphanumeric characters with the exception of the letters **I** and **O**, such as *ddd, ddL, dLd, dLL*.	**020**	No
flight/flightIdentificationPrevious/@siteSpecificPlanId	sspId_167a	Site Specific Plan Identifier prior to the modification included in the IH_FIXM message. The Site Specific Plan Identifier is assigned by Instrument Flight Procedures Automation (IFPA) to uniquely identify a flight plan in each ERAM	fb:CountType	No	**"\d{1,4}"** One to four-digits.	**24**	No

DRAFT

Name [IH_FIXM]	Name [IH]	Element Definition	Type	Complex?	Format/Permissible Values	Example	Required?
		facility.					
flight/flightIdentificationPrevious/@aircraftIdentification	flightId_02a	The aircraft identification, or flight ID (also called Call Sign) prior to the modification included in the IH_FIXM message.	fb:FlightIdentifierType	No	**" [A-Z0-9]{1,7}"**	**AAL20**	Yes
flight/supplementalData/additionalFlightInformation/nameValue/@name flight/supplementalData/additionalFlightInformation/nameValue/@value		The flight supplemental data is used to indicate that a flight message is a test message, by setting the attribute *name* to "**SIMULATED_FLIGHT**" and the attribute *value* to "**true**".	*@name:* *@value*: *fb:FreeTextType*	No	*@name:* **"[A-Z0-9_]{1,20}"** *@value:* **xs:string** **minLength=1, maxLength=100** @name = **"SIMULATED_FLIGHT"** @value = **"true"**	@name = **"SIMULATED_FLIGHT"** @value = **"true"**	No
flight/flightIdentification/@aircraftIdentification	newFlightId_02aN	The new Aircraft ID, or flight ID (also called Call Sign), that has been changed by the IH_FIXM message.	fb:FlightIdentifierType	No	**"[A-Z0-9]{7}"**	**AAL20**	Yes
flight/flightIdentification/@computerId	newComputerId_02dN	This element contains the new Computer ID that has been changed by the IH_FIXM message. The computer ID is a unique identification assigned by ERAM to each flight plan.	fb:FreeTextType	No	**"([0-9][A-HJ-NP-Z0-9]{2})|** **([0-9]{2}[A-HJ-NP-Z0-9])"** The element includes a digit, followed by two alphanumeric characters with the exception of the letters **I** and **O**, such as *ddd, ddL, dLd, dLL*.	**020**	No
flight/flightIdentification/@siteSpecificPlanId	newSspId_167aN	This element contains the new Site Specific Plan Identifier that has been changed by the IH_FIXM message.	fb:CountType	No	**"\d{1,4}"** One to four-digits.	**24**	No
flight/departure/@departurePoint	departurePoint_26a	It is used to specify the first point or other initial entity where the air traffic control/management system route starts.	fb:FreeTextType	No	xs:string minLength=2, maxLength=12 **"([A-Z0-9]{2,5}) |** **([A-Z0-9]{2,5}\d{6}) |** **(\d{4}[A-Z]?/\d{4,5}[A-Z]?)"** Any of the standard ways to represent a fix can be used for this element (fix name, lat/long, or fix-	**AB** **DFW** **KDFW** **SHP090015** **ATOKA300040** **3500N/04000W**	Yes

DRAFT

Name [IH_FIXM]	Name [IH]	Element Definition	Type	Complex?	Format/Permissible Values	Example	Required?
					radial-distance), including the standard airport designators.		
flight/arrival/@arrivalPoint	destination_27a	The final point or other final entity where the air traffic control/management system route terminates.	fb:FreeTextType	No	**xs:string** minLength=2, maxLength=12 **"([A-Z0-9]{2,5}) | ([A-Z0-9]{2,5}\d{6}) | (\d{4}[A-Z]?/\d{4,5}[A-Z]?)"** Any of the standard ways to represent a fix can be used for this element (fix name, lat/long, or fix-radial-distance), including the standard airport designators.	**AB** **DFW** **KDFW** **SHP090015** **ATOKA300040** **3500N/04000W**	Yes

5.5.1.20 Hold Information [HH] – Data Elements

Element Name [HH]	Element Definition	Type	Complex?	Format/Permissible Values	Example	Required?
sourceId_00e	This element specifies the source identification that includes a UTC time followed by a four-digit sequence number.	string	No	**"\d{10}"** Ten digits, of which the first 6 digits represent the UTC time (*hhmmss*) and the last four-digits, represent the message sequence number in the range [0000-9999].	**2359359001**, where the first 6 digits are the UTC time (23:59:35 UTC) and the last 4 digits are sequence number of the message (9001).	Yes
sourceTime_00e1	This element specifies the time component of the previous element, sourceId_00e.	string	No	**"[0-2]\d_[0-5]\d_[0-5]\d"** Time in the format *hh_mm_ss*, where: *hh* stands for the 2-digit-hour in the range 00-23, *mm* stands for the 2-digit minutes in the range 00-59, and *ss* stands for the 2-digit seconds in the range 00-59.	23_59_35 that represents 23:59:35 UTC	Yes

DRAFT

Element Name [HH]	Element Definition	Type	Complex?	Format/Permissible Values	Example	Required?
sourceSeqNo_00e2	This element specifies the message sequence number component of the sourceId_00e element.	string	No	**"\d{4}"** **Four-digit number in the range [0000-9999].**	9001	Yes
flightId_02a	Aircraft ID, or flight ID (also called Call Sign).	string	No	**"\+?[A-Z][A-Z0-9]{1,6}"** One uppercase alphabetic character followed by one to six alphanumeric characters.	**AAL20**	Yes
computerId_02d	ERAM Computer Identification (Computer ID).	string	No	**"([0-9][A-HJ-NP-Z0-9]{2})|** **([0-9]{2}[A-HJ-NP-Z0-9])"** The element includes a digit, followed by two alphanumeric characters with the exception of the letters **I** and **O**, as specified by the pattern above.	**020**	No
sspId_167a	Site Specific Plan Identifier. It is assigned by IFPA to uniquely identify a flight plan in each ERAM facility.	string	No	**"\d{1,4}"** One to four-digits.	**24**	No
holdDataFix_21a	This element specifies the position location for the flight to hold along the filed route of flight. If the message does not include the optional *holdDataTime_21d* element, the flight goes into an indefinite hold status when the flight arrives at the hold fix.	string	No	**"([A-Z0-9]{2,5}) |** **([A-Z0-9]{2,5}\d{6}) |** **(\d{4}[A-Z]?/\d{4,5}[A-Z]?)"** Any of the valid fix formats can be used, as described for *coordFix_06a* element.	**AB** **KDFW** **SHP090015** **3500N/04000W**	No
holdDataTime_21d	This element specifies the time the flight can expect further clearance at the holding location specified in the element *holdDataFix_21a*. This element can only be included in the HH messages if the element *holdDataFix_21a* is also included.	dateTime	No		**2014-06-20T20:17:52**	No
holdDataAction_21e	This element is used in a Hold message to terminate an existing stored hold.	string	No	**[C]** This element can only specify the letter C.	**C**	No

DRAFT

Element Name [HH]	Element Definition	Type	Complex?	Format/Permissible Values	Example	Required?
	It can only be included in a Hold message if the element *holdDataFix_21a* is not included.					

5.5.1.21 Hold Information [HH] - Diagram

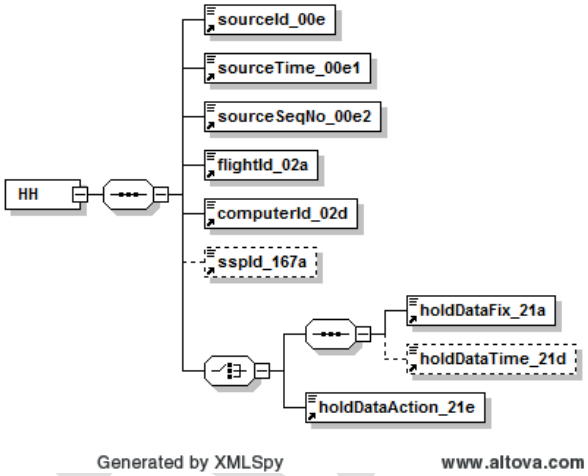

5.5.1.22 Hold Information Message in FIXM Format [HH_FIXM] – Data Elements

The following elements of the HH message in Simple XML format are not used in the FIXM format of the message:

- sourceId_00e
- sourceTime_00e1
- sourceSeqNo_00e2

Name [HH_FIXM]	Name [HH]	Element Definition	Type	Complex?	Format/Permissible Values	Example	Required?
flight/supplementalData/additionalFlightInformation/nameValue/@name flight/supplementalData/additionalFlightInformation/nameValue/@value	FDPS_SequenceNo	Sequence number assigned by SFDPS to each message it receives from HADDS. The attribute *name* includes the constant string "MSG_SEQ_NO", and the attribute *value* contains the sequence number value.	@name: @value: fb:FreeTextType	No	@name: ”MSG_SEQ_NO” @value: xs:nonNegativeInteger xs:maxInclusive value="999999999"	@name="MSG_SEQ_NO" @value="6860416"	Yes
flight/departure/@departurePoint	FDPS_Origin/departurePoint_26a	Attribute used to specify the first point or other initial entity where the air traffic control/management system route starts.	fb:FreeTextType	No	xs:string minLength=2, maxLength=12 **"([A-Z0-9]{2,5}) | ([A-Z0-9]{2,5}\d{6}) | (\d{4}[A-Z]?/\d{4,5}[A-Z]?)”** Any of the standard ways to represent a fix can be used for this element (fix name, lat/long, or fix-radial-distance), including the standard airport designators.	**AB** **DFW** **KDFW** **SHP090015** **ATOKA300040** **3500N/04000W**	No
flight/arrival/@arrivalPoint	FDPS_DestId/destination_27a	The final point or other final entity where the air traffic control/management system route terminates.	fb:FreeTextType	No	xs:string minLength=2, maxLength=12 **"([A-Z0-9]{2,5}) | ([A-Z0-9]{2,5}\d{6}) | (\d{4}[A-Z]?/\d{4,5}[A-Z]?)”** Any of the standard ways to represent a fix can be used for this element (fix name, lat/long, or fix-radial-distance), including the standard airport designators.	**AB** **DFW** **KDFW** **SHP090015** **ATOKA300040** **3500N/04000W**	No
flight/operator/operatingOrganization/organization/@name	FDPS_FlightOperator/OPRIndicator_918f	Attribute used to specify the full official name of the State, Organization, Authority, aircraft operating agency, handling agency engaged in or offering to engage in aircraft operation.	ff:TextNameType	No	xs:string	UAL	No
flight/@system	propSourceSyst	This attribute indicates which	fb:ProvenanceSystemType	No	xs:string	FDPS1	Yes

DRAFT

Name [HH_FIXM]	Name [HH]	Element Definition	Type	Complex?	Format/Permissible Values	Example	Required?
	em	SFDPS system generated the message.			maxLength=128		
flight/@timestamp	propRcvdTime	This attribute conatins the time at which the message was received by SFDPS.	ff:TimeType	No	xs:dateTime	2015-12-18T22:19:02.028Z	Yes
flight/@centre	center	This attribute specifies the code of the ARTCC (or FIR) that produced the data.	fb:ProvenanceCentreType	No	xs:string	ZAU	Yes
flight/arrival/runwayPositionAndTime/runwayTime/estimated/@time	arrivalTime	This attribute specifies the proposed or the actual time of arrival at destination, set according to the flight state.	ff:TimeType	No	xs:dateTime	2014-06-20T20:17:52	Yes
flight/departure/runwayPositionAndTime/runwayTime/actual/@time	departureTime	This element specifies the proposed or actual departure time, set according to the flight state.	ff:TimeType	No	xs:dateTime	2014-06-20T20:17:52	Yes
flight/flightStatus/@fdpsFlightStatus	flightState	This attribute contains the current status of the flight as specified by SFDPS.	nas:SfdpsFlightStatusType	Yes	xs:string "PROPOSED|ACTIVE|COMPLETED|CANCELLED|DROPPED"	ACTIVE	Yes
flight/supplementalData/additionalFlightInformation/nameValue/@name flight/supplementalData/additionalFlightInformation/nameValue/@value	fdpsGufi	The name value pair specifies the SFDPS GUFI, an identifier on every message that positively identifies what flight the message is for.	fb:FreeTextType	No	xs:string @name: "FDPS_GUFI" @value: "us\.fdps\.\d{4}-\d{2}-\d{2}T\d{2}:\d{2}:\d{2}Z\.[A-Za-z0-9/]+"	name="FDPS_GUFI" value="us.fdps.2015-12-18T16:59:10Z.000/14/100"/>	Yes
flight/flightPlan/@identifier	eramGufi_316aFPId	This attribute specifies the unique flight plan identifier.	fb:FreeTextType	No	xs:string "[A-Z]{2}\d{5}[1-7]\d{2}"	"KU68378100"	No
flight/gufi	uuidGufi	This element contains a reference that uniquely identifies a flight and that is	fb:GloballyFlightIdentifierType		xs:string "[0-9a-fA-F]{8}\-[0-9a-fA-F]{4}\-4[0-9a-fA-F]{3}\-[89aAbB][0-9a-	4aaf92be-ac0a-4dba-998f-9e56f5d450b6	Yes

DRAFT

Name [HH_FIXM]	Name [HH]	Element Definition	Type	Complex?	Format/Permissible Values	Example	Required?
		independent of any particular system. This reference conforms to the Universal Unique Identifier standard.			fA-F]{3}\-[0-9a-fA-F]{12}"		
flight/flightIdentification/@aircraftIdentification	flightId_02a	Name used by Air Traffic Services units to identify and communicate with an aircraft.	fb:FlightIdentifierType	No	**"[A-Z0-9]{7}"**	**AAL20**	Yes
flight/supplementalData/additionalFlightInformation/nameValue/@name flight/supplementalData/additionalFlightInformation/nameValue/@value		The flight supplemental data is used to indicate that a flight message is a test message, by setting the attribute *name* to "**SIMULATED_FLIGHT**" and the attribute *value* to "**true**".	*@name:* *@value*: *fb:FreeTextType*	No	*@name:* **"[A-Z0-9_]{1,20}"** *@value:* **xs:string** **minLength=1, maxLength=100** @name = **"SIMULATED_FLIGHT"** @value = **"true"**	@name = **"SIMULATED_FLIGHT"** @value = **"true"**	No
flight/flightIdentification/@computerId	computerId_02d	A unique identification assigned by ERAM to each flight plan.	fb:FreeTextType	No	**"([0-9][A-HJ-NP-Z0-9]{2})|([0-9]{2}[A-HJ-NP-Z0-9])"** The element includes a digit, followed by two alphanumeric characters with the exception of the letters **I** and **O**, such as *ddd, ddL, dLd, dLL*.	**020**	No
flight/flightIdentification/@siteSpecificPlanId	sspId_167a	Site Specific Plan Identifier. It is assigned by Instrument Flight Procedures Automation (IFPA) to uniquely identify a flight plan in each ERAM facility.	fb:CountType	No	**"\d{1,4}"** One to four-digits.	**24**	No
flight/agreed/route/holdFix	holdDataFix_21a	This element specifies the position location for the flight to hold along the filed route of flight. If the message does not include the optional attribute	fb:SignificantPointType (abstract type) *fb:FixPointType/* *ff:GeographicalLocationType/* *fb:RelativePointType*	Yes	- *fb:FixPointType* **"[A-Z0-9]{2,5}"** - *ff:GeographicalLocationType* List of two **xs:double** (latitude followed by longitude) - *fb:RelativePointType*	**KBOS** flight/status/@airborneHold is always set to "**AIRBORNE_HO**	No

Name [HH_FIXM]	Name [HH]	Element Definition	Type	Complex?	Format/Permissible Values	Example	Required?
		flight/enRoute/expectedFurtherClearanceTime/@time, the flight goes into an indefinite hold status when the flight arrives at the hold fix. The attribute *flight/status/@airborneHold* is set to "**AIRBORNE_HOLD**" when the element *flight/agreed/route/holdFix* is included.			- fix: **"[A-Z0-9]{2,5}"** - distance: *ff:DistanceType* **xs:double** - radial: *fb:DirectionType* **xs:double** minInclusive = 0 maxInclusive =360	**LD**" if holdFix specified.	
flight/enRoute/expectedFurtherClearanceTime/@time	holdDataTime_21d	This element specifies the time the flight can expect further clearance at the holding location specified in the element flight/agreed/route/holdFix. This element can only be included in the HH_FIXM messages if the element flight/agreed/route/holdFix is also included.	ff:TimeType	No	xs:dateTime	**2014-06-20T20:17:52**	No
flight/status/@airborneHold	holdDataAction_21e	This attribute specifies whether or not the aircraft is in an airborne hold. If the aircraft is in an airborne hold, the element flight/agreed/route/holdFix needs to specify the position location for the flight to hold along the filed route of flight.	fx:AirborneHoldIndicatorType	No	**"AIRBORNE_HOLD|NON_AIRBORNE_HOLD"**	**"AIRBORNE_HOLD"**	No

DRAFT

5.5.1.23 Progress Report Information [PH] – Data Elements

Element Name [PH]	Element Definition	Type	Complex?	Format/Permissible Values	Example	Required?
sourceId_00e	This element specifies the source identification that includes a UTC time followed by a four-digit sequence number.	string	No	**"\d{10}"** Ten digits, of which the first 6 digits represent the UTC time (*hhmmss*) and the last four-digits, represent the message sequence number in the range [0000-9999].	**2359359001**, where the first 6 digits are the UTC time (23:59:35 UTC) and the last 4 digits are sequence number of the message (9001).	Yes
sourceTime_00e1	This element specifies the time component of the previous element, sourceId_00e.	string	No	**"[0-2]\d_[0-5]\d_[0-5]\d"** Time in the format *hh_mm_ss*, where: *hh* stands for the 2-digit-hour in the range 00-23, *mm* stands for the 2-digit minutes in the range 00-59, and ss stands for the 2-digit seconds in the range 00-59.	23_59_35 that represents 23:59:35 UTC	Yes
sourceSeqNo_00e2	This element specifies the message sequence number component of the sourceId_00e element.	string	No	**"\d{4}"** Four-digit number in the range [0000-9999].	9001	Yes
flightId_02a	Aircraft ID, or flight ID (also called Call Sign).	string	No	**"\+?[A-Z][A-Z0-9]{1,6}"** One uppercase alphabetic character followed by one to six alphanumeric characters.	**AAL20**	Yes
computerId_02d	ERAM Computer Identification (Computer ID).	string	No	**"([0-9][A-HJ-NP-Z0-9]{2})|** **([0-9]{2}[A-HJ-NP-Z0-9])"** The element includes a digit, followed by two alphanumeric characters with the exception of the letters **I** and **O**.	**020**	No
sspId_167a	Site Specific Plan Identifier. It is assigned by IFPA to uniquely identify a flight plan in each ERAM facility.	string	No	**"\d{1,4}"** One to four-digits.	**24**	No
progressReportFix_18a	This element specifies the position location report of the flight along the filed route of	string	No	**"([A-Z0-9]{2,5}) |** **([A-Z0-9]{2,5}\d{6}) |**	**AB** **KDFW**	Yes

Element Name [PH]	Element Definition	Type	Complex?	Format/Permissible Values	Example	Required?
	flight.			**(\d{4}[A-Z]?/\d{4,5}[A-Z]?)"** It uses the standard fix formats, as specified for the element *coordFix_06a* **.**	**SHP090015**	
progressReportTime_18d	This element specifies the time of the flight arriving at the fix specified in element *progressReportFix_18a*, above.	dateTime	No		**2014-10-31T22:30:00**	Yes

5.5.1.24 Progress Report Information [PH] - Diagram

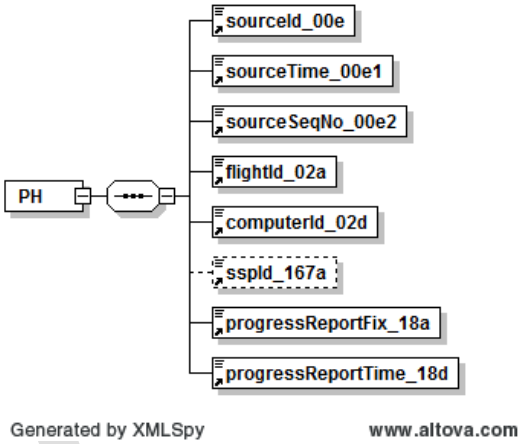

5.5.1.25 Progress Report Information Message in FIXM Format [PH_FIXM] – Data Elements

The following elements of the PH message in Simple XML format are not translated in the FIXM format of the message:

- sourceId_00e

- sourceTime_00e1
- sourceSeqNo_00e2

Name [PH_FIXM]	Name [PH]	Element Definition	Type	Complex?	Format/Permissible Values	Example	Required?
flight/supplementalData/additionalFlightInformation/nameValue/@name flight/supplementalData/additionalFlightInformation/nameValue/@value	FDPS_SequenceNo	Sequence number assigned by SFDPS to each message it receives from HADDS. The attribute *name* includes the constant string "MSG_SEQ_NO", and the attribute *value* contains the sequence number value.	@name: @value: fb:FreeTextType	No	@name: ”MSG_SEQ_NO” @value: xs:nonNegativeInteger xs:maxInclusive value="999999999"	@name="MSG_SEQ_NO" @value="6860416"	Yes
flight/departure/@departurePoint	FDPS_Origin/departurePoint_26a	Attribute used to specify the first point or other initial entity where the air traffic control/management system route starts.	fb:FreeTextType	No	xs:string minLength=2, maxLength=12 **"([A-Z0-9]{2,5}) | ([A-Z0-9]{2,5}\d{6}) | (\d{4}[A-Z]?/\d{4,5}[A-Z]?)”** Any of the standard ways to represent a fix can be used for this element (fix name, lat/long, or fix-radial-distance), including the standard airport designators.	**AB** **DFW** **KDFW** **SHP090015** **ATOKA300040** **3500N/04000W**	No
flight/arrival/@arrivalPoint	FDPS_DestId/destination_27a	The final point or other final entity where the air traffic control/management system route terminates.	fb:FreeTextType	No	xs:string minLength=2, maxLength=12 **"([A-Z0-9]{2,5}) | ([A-Z0-9]{2,5}\d{6}) | (\d{4}[A-Z]?/\d{4,5}[A-Z]?)”** Any of the standard ways to represent a fix can be used for this element (fix name, lat/long, or fix-radial-distance), including the standard airport designators.	**AB** **DFW** **KDFW** **SHP090015** **ATOKA300040** **3500N/04000W**	No
flight/operator/operatingOrganization/organization/@name	FDPS_FlightOperator/OPRIndicator_918f	Attribute used to specify the full official name of the State, Organization, Authority,	ff:TextNameType	No	xs:string	UAL	No

DRAFT

Name [PH_FIXM]	Name [PH]	Element Definition	Type	Complex?	Format/Permissible Values	Example	Required?
		aircraft operating agency, handling agency engaged in or offering to engage in aircraft operation.					
flight/@system	propSourceSystem	This attribute indicates which SFDPS system generated the message.	fb:ProvenanceSystemType	No	xs:string maxLength=128	FDPS1	Yes
flight/@timestamp	propRcvdTime	This attribute conatins the time at which the message was received by SFDPS.	ff:TimeType	No	xs:dateTime	2015-12-18T22:19:02.028Z	Yes
flight/@centre	center	This attribute specifies the code of the ARTCC (or FIR) that produced the data.	fb:ProvenanceCentreType	No	xs:string	ZAU	Yes
flight/arrival/runwayPositionAndTime/runwayTime/[estimated|actual]/@time	arrivalTime	This attribute specifies the proposed or the actual time of arrival at destination, set according to the flight state.	ff:TimeType	No	xs:dateTime	2014-06-20T20:17:52	Yes
flight/departure/runwayPositionAndTime/runwayTime/[actual|estimated]/@time	departureTime	This element specifies the proposed or actual departure time, set according to the flight state.	ff:TimeType	No	xs:dateTime	2014-06-20T20:17:52	Yes
flight/flightStatus/@fdpsFlightStatus	flightState	This attribute contains the current status of the flight as specified by SFDPS.	nas:SfdpsFlightStatusType	Yes	xs:string “PROPOSED|ACTIVE|COMPLETED|CANCELLED|DROPPED”	ACTIVE	Yes
flight/supplementalData/additionalFlightInformation/nameValue/@name flight/supplementalData/additionalFlightInformation/nameValue/@value	fdpsGufi	The name value pair specifies the SFDPS GUFI, an identifier on every message that positively identifies what flight the message is for.	fb:FreeTextType	No	xs:string @name: "FDPS_GUFI" @value: "us\.fdps\.\d{4}-\d{2}-\d{2}T\d{2}:\d{2}:\d{2}Z\.[A-Za-z0-9/]+"	name="FDPS_GUFI" value="us.fdps.2015-12-18T16:59:10Z.000/14/100"/>	Yes
flight/flightPlan/@identifier	eramGufi_316aF	This attribute specifies the	fb:FreeTextType	No	xs:string	"KU68378100"	No

DRAFT

Name [PH_FIXM]	Name [PH]	Element Definition	Type	Complex?	Format/Permissible Values	Example	Required?
	PId	unique flight plan identifier.			"[A-Z]{2}\d{5}[1-7]\d{2}"		
flight/gufi	uuidGufi	This element contains a reference that uniquely identifies a flight and that is independent of any particular system. This reference conforms to the Universal Unique Identifier standard.	fb:GloballyFlightIdentifierType		xs:string "[0-9a-fA-F]{8}\-[0-9a-fA-F]{4}\-4[0-9a-fA-F]{3}\-[89aAbB][0-9a-fA-F]{3}\-[0-9a-fA-F]{12}"	4aaf92be-ac0a-4dba-998f-9e56f5d450b6	Yes
flight/flightIdentification/@aircraftIdentification	flightId_02a	Name used by Air Traffic Services units to identify and communicate with an aircraft.	fb:FlightIdentifierType	No	**"[A-Z0-9]{7}"**	**AAL20**	Yes
flight/supplementalData/additionalFlightInformation/nameValue/@name flight/supplementalData/additionalFlightInformation/nameValue/@value		The flight supplemental data is used to indicate that a flight message is a test message, by setting the attribute *name* to "**SIMULATED_FLIGHT**" and the attribute *value* to "**true**".	*@name:* *@value*: *fb:FreeTextType*	No	*@name:* **"[A-Z0-9_]{1,20}"** *@value:* **xs:string** **minLength=1, maxLength=100** @name = **"SIMULATED_FLIGHT"** @value = **"true"**	@name = **"SIMULATED_FLIGHT"** @value = **"true"**	No
flight/flightIdentification/@computerId	computerId_02d	A unique identification assigned by ERAM to each flight plan.	fb:FreeTextType	No	**"([0-9][A-HJ-NP-Z0-9]{2})|([0-9]{2}[A-HJ-NP-Z0-9])"** The element includes a digit, followed by two alphanumeric characters with the exception of the letters **I** and **O**, such as *ddd, ddL, dLd, dLL*.	**020**	No
flight/flightIdentification/@siteSpecificPlanId	sspId_167a	Site Specific Plan Identifier. It is assigned by Instrument Flight Procedures Automation (IFPA) to uniquely identify a flight plan in each ERAM facility.	fb:CountType	No	**"\d{1,4}"** One to four-digits.	**24**	No
flight/enRoute/position/position	progressReportFix_18a	This element specifies the position location report of the	fb:SignificantPointType (abstract	Yes	- *fb:FixPointType* **"[A-Z0-9]{2,5}"**	**KBOS**	Yes

DRAFT

Name [PH_FIXM]	Name [PH]	Element Definition	Type	Complex?	Format/Permissible Values	Example	Required?
		flight along the filed route of flight.	type) *fb:FixPointType/ ff:GeographicalLocationType/ fb:RelativePoint Type*		- *ff:GeographicalLocationType* List of two **xs:double** (latitude followed by longitude) - *fb:RelativePointType* - fix: **"[A-Z0-9]{2,5}"** - distance: *ff:DistanceType* **xs:double** - radial: *fb:DirectionType* **xs:double** minInclusive = 0 maxInclusive =360		
flight/enRoute/position/@reportSource	progressReportFix_18a	The source of the current position report information.	fx:PositionReportType	No	**"PROGRESS_REPORT"**	**PROGRESS_REPORT**	No
flight/enRoute/position/@positionTime	progressReportTime_18d	This element specifies the time of the flight arriving at the fix specified in element *flight/enRoute/position/position*, above.	ff:TimeType	No	xs:dateTime	**2014-10-31T22:30:00**	Yes

5.5.1.26 Flight Arrival Information [HV] – Data Elements

Element Name [HV]	Element Definition	Type	Complex?	Format/Permissible Values	Example	Required?
sourceId_00e	This element specifies the source identification that includes a UTC time followed by a four-digit sequence number.	string	No	**"\d{10}"** Ten digits, of which the first 6 digits represent the UTC time (*hhmmss*) and the last four-digits, represent the message sequence number in the range [0000-9999].	**2359359001**, where the first 6 digits are the UTC time (23:59:35 UTC) and the last 4 digits are sequence number of	Yes

Element Name [HV]	Element Definition	Type	Complex?	Format/Permissible Values	Example	Required?
					the message (9001).	
sourceTime_00e1	This element specifies the time component of the previous element, sourceId_00e.	string	No	**"[0-2]\d_[0-5]\d_[0-5]\d"** Time in the format *hh_mm_ss*, where: *hh* stands for the 2-digit-hour in the range 00-23, *mm* stands for the 2-digit minutes in the range 00-59, and *ss* stands for the 2-digit seconds in the range 00-59.	23_59_35 that represents 23:59:35 UTC	Yes
sourceSeqNo_00e2	This element specifies the message sequence number component of the sourceId_00e element.	string	No	**"\d{4}"** Four-digit number in the range [0000-9999].	9001	Yes
flightId_02a	Aircraft ID, or flight ID (also called Call Sign).	string	No	**"\+?[A-Z][A-Z0-9]{1,6}"** One uppercase alphabetic character followed by one to six alphanumeric characters.	**AAL20**	Yes
computerId_02d	ERAM Computer Identification (Computer ID).	string	No	**"([0-9][A-HJ-NP-Z0-9]{2})| ([0-9]{2}[A-HJ-NP-Z0-9])"** The element includes a digit, followed by two alphanumeric characters with the exception of the letters **I** and **O**.	**020**	No
sspId_167a	Site Specific Plan Identifier. It is assigned by IFPA to uniquely identify a flight plan in each ERAM facility.	string	No	**"\d{1,4}"** One to four-digits.	**24**	No
departurePoint_26a	This element specifies the point at which to start processing the flight plan	string	No	**"([A-Z0-9]{2,5}) | ([A-Z0-9]{2,5}\d{6}) | (\d{4}[A-Z]?/\d{4,5}[A-Z]?)"** It uses the standard fix formats, as specified for the element *coordFix_06a* **.**	**AB** **KDFW** **SHP090015** 3500N/04000W	Yes
destination_27a	This element specifies the destination, which is the point at which to end processing the flight plan.	string	No	**"([A-Z0-9]{2,5}) | ([A-Z0-9]{2,5}\d{6}) | (\d{4}[A-Z]?/\d{4,5}[A-Z]?)"** It uses the standard fix formats, as specified for the element *coordFix_06a* **.**	**AB** **KDFW** **SHP090015** 3500N/04000W	Yes
arrivalTime_28b	This element specifies the reported	string	No	**"[A-Z]\d{4}"**	**A2020**	Yes

DRAFT

Element Name [HV]	Element Definition	Type	Complex?	Format/Permissible Values	Example	Required?
	time of arrival.			where the first letter can be **A** or **E**, as follows: **A:** if time received in field 00 of TB message caused flight to be dropped; **E:** if flight dropped by application of AFDI or EFDI. The four-digits specify time in *hhmm* format.		

DRAFT

5.5.1.27 Flight Arrival Information [HV] - Diagram

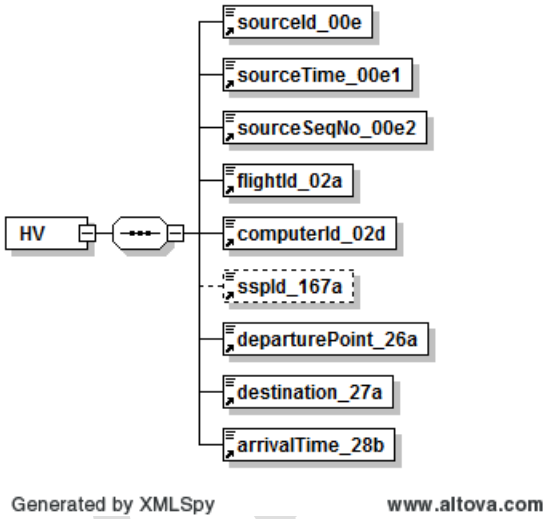

5.5.1.28 Flight Arrival Information Message in FIXM Format [HV_FIXM] – Data Elements

The following elements of the HV message in Simple XML format are not used in the FIXM format of the message:

- sourceId_00e
- sourceTime_00e1
- sourceSeqNo_00e2

Name [HV_FIXM]	Name [HV]	Element Definition	Type	Complex?	Format/Permissible Values	Example	Required?
flight/supplementalData/additionalFlightInformation/nameValue/@name	FDPS_SequenceNo	Sequence number assigned by SFDPS to each message it receives	@name:	No	@name="MSG_SEQ_NO"	name="MSG_SEQ_NO"	Yes

Name [HV_FIXM]	Name [HV]	Element Definition	Type	Complex?	Format/Permissible Values	Example	Required?
flight/supplementalData/additionalFlightInformation/nameValue/@value		from HADDS. The attribute *name* includes the constant string "MSG_SEQ_NO", and the attribute *value* contains the sequence number value.	@value: fb:FreeTextType		@value: xs:nonNegativeInteger xs:maxInclusive value="999999999"	value="6860416"	
flight/operator/operatingOrganization/organization/@name	FDPS_FlightOperator/OPRIndicator_918f	Attribute used to specify the full official name of the State, Organization, Authority, aircraft operating agency, handling agency engaged in or offering to engage in aircraft operation.	ff:TextNameType	No	xs:string	UAL	No
flight/@system	propSourceSystem	This attribute indicates which SFDPS system generated the message.	fb:ProvenanceSystemType	No	xs:string maxLength=128	FDPS1	Yes
flight/@timestamp	propRcvdTime	This attribute conatins the time at which the message was received by SFDPS.	ff:TimeType	No	xs:dateTime	2015-12-18T22:19:02.028Z	Yes
flight/@centre	center	This attribute specifies the code of the ARTCC (or FIR) that produced the data.	fb:ProvenanceCentreType	No	xs:string	ZAU	Yes
flight/departure/runwayPositionAndTime/runwayTime/actual/@time	departureTime	This element specifies the proposed or actual departure time, set according to the flight state.	ff:TimeType	No	xs:dateTime	2014-06-20T20:17:52	Yes
flight/flightStatus/@fdpsFlightStatus	flightState	This attribute contains the current status of the flight as specified by SFDPS.	nas:SfdpsFlightStatusType	Yes	xs:string "PROPOSED|ACTIVE|COMPLETED|CANCELLED|DROPPED"	ACTIVE	Yes
flight/supplementalData/additionalFlightInformation/nameValue/@name flight/supplementalData/additionalFlightInformation/nameValue/@value	fdpsGufi	The name value pair specifies the SFDPS GUFI, an identifier on every message that positively identifies what flight the message is for.	fb:FreeTextType	No	xs:string @name: "FDPS_GUFI" @value: "us\.fdps\.\d{4}-\d{2}-\d{2}T\d{2}:\d{2}:\d{2}Z\.[A-Za-z0-9/]+"	name="FDPS_GUFI" value="us.fdps.2015-12-18T16:59:10Z.000/14/100"/>	Yes

DRAFT

Name [HV_FIXM]	Name [HV]	Element Definition	Type	Complex?	Format/Permissible Values	Example	Required?
flight/flightPlan/@identifier	eramGufi_316aFPId	This attribute specifies the unique flight plan identifier.	fb:FreeTextType	No	xs:string "[A-Z]{2}\d{5}[1-7]\d{2}"	"KU68378100"	No
flight/gufi	uuidGufi	This element contains a reference that uniquely identifies a flight and that is independent of any particular system. This reference conforms to the Universal Unique Identifier standard.	fb:GloballyFlightIdentifierType		xs:string "[0-9a-fA-F]{8}\-[0-9a-fA-F]{4}\-4[0-9a-fA-F]{3}\-[89aAbB][0-9a-fA-F]{3}\-[0-9a-fA-F]{12}"	4aaf92be-ac0a-4dba-998f-9e56f5d450b6	Yes
flight/flightIdentification/@aircraftIdentification	flightId_02a	Name used by Air Traffic Services units to identify and communicate with an aircraft.	fb:FlightIdentifierType	No	**"[A-Z0-9]{7}"**	**AAL20**	Yes
flight/supplementalData/additionalFlightInformation/nameValue/@name flight/supplementalData/additionalFlightInformation/nameValue/@value		The flight supplemental data is used to indicate that a flight message is a test message, by setting the attribute *name* to "**SIMULATED_FLIGHT**" and the attribute *value* to "**true**".	*@name:* *@value*: *fb:FreeTextType*	No	*@name:* **"[A-Z0-9_]{1,20}"** *@value:* **xs:string** **minLength=1, maxLength=100** @name = **"SIMULATED_FLIGHT"** @value = **"true"**	@name = **"SIMULATED_FLIGHT"** @value = **"true"**	No
flight/flightIdentification/@computerId	computerId_02d	A unique identification assigned by ERAM to each flight plan.	fb:FreeTextType	No	**"([0-9][A-HJ-NP-Z0-9]{2})|([0-9]{2}[A-HJ-NP-Z0-9])"** The element includes a digit, followed by two alphanumeric characters with the exception of the letters **I** and **O**, such as *ddd, ddL, dLd, dLL*.	**020**	No
flight/flightIdentification/@siteSpecificPlanId	sspId_167a	Site Specific Plan Identifier. It is assigned by Instrument Flight Procedures Automation (IFPA) to uniquely identify a flight plan in each ERAM facility.	fb:CountType	No	**"\d{1,4}"** One to four-digits.	**24**	No

DRAFT

Name [HV_FIXM]	Name [HV]	Element Definition	Type	Complex?	Format/Permissible Values	Example	Required?
flight/departure/@departurePoint	departurePoint_26a	It is used to specify the first point or other initial entity where the air traffic control/management system route starts.	fb:FreeTextType	No	xs:string minLength=2, maxLength=12 **"([A-Z0-9]{2,5}) | ([A-Z0-9]{2,5}\d{6}) | (\d{4}[A-Z]?/\d{4,5}[A-Z]?)"** Any of the standard ways to represent a fix can be used for this element (fix name, lat/long, or fix-radial-distance), including the standard airport designators.	**AB** **DFW** **KDFW** **SHP090015** **ATOKA300040** **3500N/04000W**	Yes
flight/arrival/@arrivalPoint	destination_27a	The final point or other final entity where the air traffic control/management system route terminates.	fb:FreeTextType	No	**xs:string** minLength=2, maxLength=12 **"([A-Z0-9]{2,5}) | ([A-Z0-9]{2,5}\d{6}) | (\d{4}[A-Z]?/\d{4,5}[A-Z]?)"** Any of the standard ways to represent a fix can be used for this element (fix name, lat/long, or fix-radial-distance), including the standard airport designators.	**AB** **DFW** **KDFW** **SHP090015** **ATOKA300040** **3500N/04000W**	Yes
flight/arrival/runwayPositionAndTime/runwayTime/actual/@time	arrivalTime_28b	This element specifies the actual time at which the aircraft lands on runway.	ff:TimeType	No	**xs:dateTime**	**2015-06-20T20:17:52**	Yes

5.5.1.29 Flight Plan Update Information [HU] – Data Elements

See Data Elements for Flight Plan [FH]: Section 5.5.1.2.

DRAFT

5.5.1.30 Flight Plan Update Information [HU] - Diagram

See Diagram for Flight Plan [FH]: Section 5.5.1.2.

5.5.1.31 Flight Plan Update Information Message in FIXM Format [HU_FIXM] – Data Elements

See Data Elements for Flight Plan Message in FIXM Format [FH_FIXM]: Section 1.1.1.1

5.5.1.32 Expected Departure Time Information [ET] – Data Elements

Element Name [ET]	Element Definition	Type	Complex?	Format/Permissible Values	Example	Required?
sourceId_00e	This element specifies the source identification that includes a UTC time followed by a four-digit sequence number.	string	No	**"\d{10}"** Ten digits, of which the first 6 digits represent the UTC time (*hhmmss*) and the last four-digits, represent the message sequence number in the range [0000-9999].	**2359359001**, where the first 6 digits are the UTC time (23:59:35 UTC) and the last 4 digits are sequence number of the message (9001).	Yes
sourceTime_00e1	This element specifies the time component of the previous element, sourceId_00e.	string	No	**"[0-2]\d_[0-5]\d_[0-5]\d"** Time in the format *hh_mm_ss*, where: *hh* stands for the 2-digit-hour in the range 00-23, *mm* stands for the 2-digit minutes in the range 00-59, and *ss* stands for the 2-digit seconds in the range 00-59.	23_59_35 that represents 23:59:35 UTC	Yes
sourceSeqNo_00e2	This element specifies the message sequence number component of the sourceId_00e element.	string	No	**"\d{4}"** Four-digit number in the range [0000-9999].	9001	Yes
flightId_02a	Aircraft ID, or flight ID (also called Call Sign).	string	No	**"\+?[A-Z][A-Z0-9]{1,6}"** One uppercase alphabetic character followed by one to six alphanumeric characters**.**	**AAL20**	Yes

Element Name [ET]	Element Definition	Type	Complex?	Format/Permissible Values	Example	Required?
computerId_02d	ERAM Computer Identification (Computer ID).	string	No	**"([0-9][A-HJ-NP-Z0-9]{2})| ([0-9]{2}[A-HJ-NP-Z0-9])"** The element includes a digit, followed by two alphanumeric characters with the exception of the letters **I** and **O**, as specified by the pattern above.	**020**	No
sspId_167a	Site Specific Plan Identifier. It is assigned by IFPA to uniquely identify a flight plan in each ERAM facility.	string	No	**"\d{1,4}"** One to four-digits.	**24**	No
EDCT_92a	This element specifies the Estimated Departure Clearance Time.	string	No	**"\d{4}"** Time expressed in *hhmm* format.	**1722**	Either this element or the element *cancellationIndicator_92b* has to be included in the ET message.
cancellationIndicator_92b	This element is used to cancel the EDCT for an aircraft	string	No	**"C"** This element can only specify the letter C.		Either this element or the element EDCT_92a has to be included in the ET message.

DRAFT

5.5.1.33 Expected Departure Time Information [ET] - Diagram

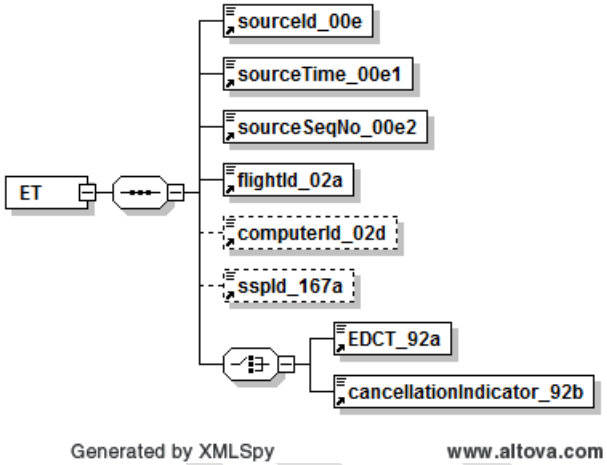

5.5.1.34 Expected Departure Time Information Message in FIXM Format [ET_FIXM] – Data Elements

The following elements of the ET message in Simple XML format are not translated in the FIXM format of the message:

- sourceId_00e
- sourceTime_00e1
- sourceSeqNo_00e2

Name [ET_FIXM]	Name [ET]	Element Definition	Type	Complex?	Format/Permissible Values	Example	Required?
flight/supplementalData/additionalFlightInformation/nameValue/@name flight/supplementalData/additionalFlightInformation/nameValue/@value	FDPS_SequenceNo	Sequence number assigned by SFDPS to each message it receives from HADDS. The attribute *name* includes the constant string	@name: @value: fb:FreeTextType	No	@name: ”MSG_SEQ_NO” @value: xs:nonNegativeInteger	@name="MSG_SEQ_NO" @value="6860416"	Yes

Name [ET_FIXM]	Name [ET]	Element Definition	Type	Complex?	Format/Permissible Values	Example	Required?
		"MSG_SEQ_NO", and the attribute *value* contains the sequence number value.			xs:maxInclusive value="999999999"		
flight/departure/@departurePoint	FDPS_Origin/departurePoint_26a	Attribute used to specify the first point or other initial entity where the air traffic control/management system route starts.	fb:FreeTextType	No	xs:string minLength=2, maxLength=12 **"([A-Z0-9]{2,5}) | ([A-Z0-9]{2,5}\d{6}) | (\d{4}[A-Z]?/\d{4,5}[A-Z]?)"** Any of the standard ways to represent a fix can be used for this element (fix name, lat/long, or fix-radial-distance), including the standard airport designators.	**AB** **DFW** **KDFW** **SHP090015** **ATOKA300040** **3500N/04000W**	No
flight/arrival/@arrivalPoint	FDPS_DestId/destination_27a	The final point or other final entity where the air traffic control/management system route terminates.	fb:FreeTextType	No	xs:string minLength=2, maxLength=12 **"([A-Z0-9]{2,5}) | ([A-Z0-9]{2,5}\d{6}) | (\d{4}[A-Z]?/\d{4,5}[A-Z]?)"** Any of the standard ways to represent a fix can be used for this element (fix name, lat/long, or fix-radial-distance), including the standard airport designators.	**AB** **DFW** **KDFW** **SHP090015** **ATOKA300040** **3500N/04000W**	No
flight/operator/operatingOrganization/organization/@name	FDPS_FlightOperator/OPRIndicator_918f	Attribute used to specify the full official name of the State, Organization, Authority, aircraft operating agency, handling agency engaged in or offering to engage in aircraft operation.	ff:TextNameType	No	xs:string	UAL	No
flight/@system	propSourceSystem	This attribute indicates which SFDPS system	fb:ProvenanceSystemType	No	xs:string maxLength=128	FDPS1	Yes

DRAFT

Name [ET_FIXM]	Name [ET]	Element Definition	Type	Complex?	Format/Permissible Values	Example	Required?
		generated the message.					
flight/@timestamp	propRcvdTime	This attribute conatins the time at which the message was received by SFDPS.	ff:TimeType	No	xs:dateTime	2015-12-18T22:19:02.028Z	Yes
flight/@centre	center	This attribute specifies the code of the ARTCC (or FIR) that produced the data.	fb:ProvenanceCentreType	No	xs:string	ZAU	Yes
flight/arrival/runwayPositionAndTime/runwayTime/estimated/@time	arrivalTime	This attribute specifies the proposed or the actual time of arrival at destination, set according to the flight state.	ff:TimeType	No	xs:dateTime	2014-06-20T20:17:52	Yes
flight/departure/runwayPositionAndTime/runwayTime/[actual|estimated]/@time	departureTime	This element specifies the proposed or actual departure time, set according to the flight state.	ff:TimeType	No	xs:dateTime	2014-06-20T20:17:52	Yes
flight/flightStatus/@fdpsFlightStatus	flightState	This attribute contains the current status of the flight as specified by SFDPS.	nas:SfdpsFlightStatusType	Yes	xs:string “PROPOSED|ACTIVE|COMPLETED|CANCELLED|DROPPED”	ACTIVE	Yes
flight/supplementalData/additionalFlightInformation/nameValue/@name flight/supplementalData/additionalFlightInformation/nameValue/@value	fdpsGufi	The name value pair specifies the SFDPS GUFI, an identifier on every message that positively identifies what flight the message is for.	fb:FreeTextType	No	xs:string @name: "FDPS_GUFI" @value: "us\.fdps\.\d{4}-\d{2}-\d{2}T\d{2}:\d{2}:\d{2}Z\.[A-Za-z0-9/]+"	name="FDPS_GUFI" value="us.fdps.2015-12-18T16:59:10Z.000/14/100"/>	Yes
flight/flightPlan/@identifier	eramGufi_316aFPId	This attribute specifies the unique flight plan identifier.	fb:FreeTextType	No	xs:string "[A-Z]{2}\d{5}[1-7]\d{2}"	"KU68378100"	No
flight/gufi	uuidGufi	This element contains a reference that uniquely	fb:GloballyFlightIdentifierType		xs:string "[0-9a-fA-F]{8}\-[0-9a-fA-F]{4}\-	4aaf92be-ac0a-4dba-998f-9e56f5d450b6	Yes

DRAFT

Name [ET_FIXM]	Name [ET]	Element Definition	Type	Complex?	Format/Permissible Values	Example	Required?
		identifies a flight and that is independent of any particular system. This reference conforms to the Universal Unique Identifier standard.			4[0-9a-fA-F]{3}\-[89aAbB][0-9a-fA-F]{3}\-[0-9a-fA-F]{12}"		
flight/flightIdentification/@aircraftIdentification	flightId_02a	Name used by Air Traffic Services units to identify and communicate with an aircraft.	fb:FlightIdentifierType	No	**"[A-Z0-9]{7}"**	**AAL20**	Yes
flight/supplementalData/additionalFlightInformation/nameValue/@name flight/supplementalData/additionalFlightInformation/nameValue/@value		The flight supplemental data is used to indicate that a flight message is a test message, by setting the attribute *name* to "**SIMULATED_FLIGHT**" and the attribute *value* to "**true**".	*@name:* *@value*: *fb:FreeTextType*	No	*@name:* **"[A-Z0-9_]{1,20}"** *@value:* **xs:string** **minLength=1, maxLength=100** @name = **"SIMULATED_FLIGHT"** @value = **"true"**	@name = **"SIMULATED_FLIGHT"** @value = **"true"**	No
flight/flightIdentification/@computerId	computerId_02d	A unique identification assigned by ERAM to each flight plan.	fb:FreeTextType	No	**"([0-9][A-HJ-NP-Z0-9]{2})|([0-9]{2}[A-HJ-NP-Z0-9])"** The element includes a digit, followed by two alphanumeric characters with the exception of the letters **I** and **O**, such as *ddd, ddL, dLd, dLL*.	**020**	No
flight/flightIdentification/@siteSpecificPlanId	sspId_167a	Site Specific Plan Identifier. It is assigned by Instrument Flight Procedures Automation (IFPA) to uniquely identify a flight	fb:CountType	No	**"\d{1,4}"** One to four-digits.	**24**	No

DRAFT

Name [ET_FIXM]	Name [ET]	Element Definition	Type	Complex?	Format/Permissible Values	Example	Required?
		plan in each ERAM facility.					
flight/departure/runwayPositionAndTime/runwayTime/controlled/@time	EDCT_92a	This element specifies the time (Estimated Departure Clearance Time) a flight is required to take off from the runway as a result of a tactical slot allocation or Traffic Management Initiative.	ff:TimeType	No	**dateTime**	**2014-06-20T20:17:52**	No
flight/departure/runwayPositionAndTime/runwayTime/controlled	cancellationIndicator_92	When used to cancel the EDCT for an aircraft, the value of this element is set to NULL.	Value set to NULL: xsi:nil="true"	Yes	NULL		No

5.5.1.35 Position Update Information [HP] – Data Elements

Element Name [HP]	Element Definition	Type	Complex?	Format/Permissible Values	Example	Required?
sourceId_00e	This element specifies the source identification that includes a UTC time followed by a four-digit sequence number.	string	No	**"\d{10}"** Ten digits, of which the first 6 digits represent the UTC time (*hhmmss*) and the last four-digits, represent the message sequence number in the range [0000-9999].	**2359359001**, where the first 6 digits are the UTC time (23:59:35 UTC) and the last 4 digits are sequence number of the message (9001).	Yes
sourceTime_00e1	This element specifies the time component of the previous element, sourceId_00e.	string	No	**"[0-2]\d_[0-5]\d_[0-5]\d"** Time in the format *hh_mm_ss,* where: *hh* stands for the 2-digit-hour in the range 00-23, *mm* stands for the 2-digit minutes in the range 00-59, and *ss* stands for the 2-digit seconds in the range 00-59.	**23_59_35** that represents 23:59:35 UTC	Yes
sourceSeqNo_00e2	This element specifies the message sequence number	string	No	**"\d{4}"** Four-digit number in the range [0000-9999].	**9001**	Yes

Element Name [HP]	Element Definition	Type	Complex?	Format/Permissible Values	Example	Required?
	component of the sourceId_00e element.					
flightId_02a	Aircraft ID, or flight ID (also called Call Sign).	string	No	**"\+?[A-Z][A-Z0-9]{1,6}"** One uppercase alphabetic character followed by one to six alphanumeric characters.	**AAL20**	Yes
computerId_02d	ERAM Computer Identification (Computer ID).	string	No	**"([0-9][A-HJ-NP-Z0-9]{2})|** **([0-9]{2}[A-HJ-NP-Z0-9])"** The element includes a digit, followed by two alphanumeric characters with the exception of the letters **I** and **O**, as specified by the pattern above.	**020**	No
sspId_167a	Site Specific Plan Identifier. It is assigned by IFPA to uniquely identify a flight plan in each ERAM facility.	string	No	**"\d{1,4}"** One to four-digits.	**24**	No
coordFix_06a	The Coordination fix represents the starting point to begin processing the flight plan route from one of the following points: the departure airport, the airfile fix or the adjacent center inbound coordination fix. For ARTS III flight plans the coordination fix Field 06 is used as the inbound coordination fix or the outbound coordination fix or, for an ARTS internal flight, it can be the departure or destination airport.	string	No	**"([A-Z0-9]{2,5})|** **([A-Z0-9]{2,5}\d{6}) |** **(\d{4}[A-Z]?/\d{4,5}[A-Z]?)|** **([A-Z0-9]{3,4}}"** This element can have one of the following formats: Two to five alphanumeric characters for a fix name. The fix name as above followed by six digits, for a fix radial distance. Four-digits followed by an optional alphabetic character, followed by a virgule ('/'), followed by four to five digits followed by an optional alphanumeric character for a lat/long. Three to four alphanumeric characters for a location identifier (LOCID).	**AB** **DFW** **KDFW** **AB200010** **SHP090015** **ATOKA300040** **3500/04000** **3500N/04000W**	Yes
coordStatusTime_07d	Coordination time that represents the starting time in hours and minutes at the coordination fix.	string	No	**"((A|D|E|P|F)[0-1][0-9][0-5][0-9) |** **((A|D|E|P|F)2[0-3][0-5][0-9])"** The element includes one letter (possible values are **A**, **D, E**, **P**, or **F**) followed by four-	**P1020**	Yes

DRAFT

Element Name [HP]	Element Definition	Type	Complex?	Format/Permissible Values	Example	Required?
				digits that represent time as *hhmm*.		
coordStatus_07d1	The coordStatus field is the single letter **A**, **D**, **E**, **F**, or **P**, as described for element coordStatusTime_07d.	string	No	**"(A|D|E|P|F)"**	**F**	Yes
coordTime_07d2	Starting time at the coordination fix.	dateTime	No		**2015-06-20T20:17:52**	Yes
delayTime_07e	This element is used to provide an optional delay time.	string	No	**"\d{3}"** Three digits representing time in minutes.	**030**	No

DRAFT

5.5.1.36 Position Update Information [HP] - Diagram

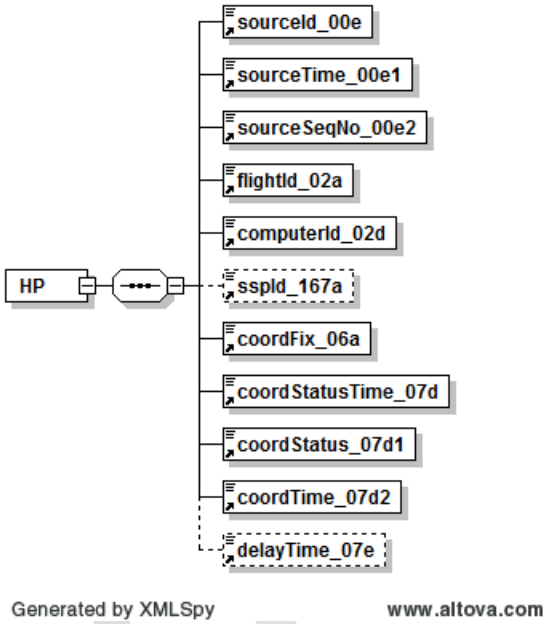

5.5.1.37 Position Update Information Message in FIXM Format [HP_FIXM] – Data Elements

The following elements of the HP message in Simple XML format are not translated in the FIXM format of the message:

- sourceId_00e
- sourceTime_00e1
- sourceSeqNo_00e2
- coordStatusTime_07d

Name [HP_FIXM]	Name [HP]	Element Definition	Type	Complex?	Format/Permissible Values	Example	Required?

Name [HP_FIXM]	Name [HP]	Element Definition	Type	Complex?	Format/Permissible Values	Example	Required?
flight/supplementalData/additionalFlightInformation/nameValue/@name flight/supplementalData/additionalFlightInformation/nameValue/@value	FDPS_SequenceNo	Sequence number assigned by SFDPS to each message it receives from HADDS. The attribute *name* includes the constant string "MSG_SEQ_NO", and the attribute *value* contains the sequence number value.	@name: @value: fb:FreeTextType	No	@name: ”MSG_SEQ_NO” @value: xs:nonNegativeInteger xs:maxInclusive value="999999999"	@name="MSG_SEQ_NO" @value="6860416"	Yes
flight/departure/@departurePoint	FDPS_Origin/departurePoint_26a	Attribute used to specify the first point or other initial entity where the air traffic control/management system route starts.	fb:FreeTextType	No	xs:string minLength=2, maxLength=12 **"([A-Z0-9]{2,5}) | ([A-Z0-9]{2,5}\d{6}) | (\d{4}[A-Z]?/\d{4,5}[A-Z]?)”** Any of the standard ways to represent a fix can be used for this element (fix name, lat/long, or fix-radial-distance), including the standard airport designators.	**AB** **DFW** **KDFW** **SHP090015** **ATOKA300040** **3500N/04000W**	No
flight/arrival/@arrivalPoint	FDPS_DestId/destination_27a	The final point or other final entity where the air traffic control/management system route terminates.	fb:FreeTextType	No	xs:string minLength=2, maxLength=12 **"([A-Z0-9]{2,5}) | ([A-Z0-9]{2,5}\d{6}) | (\d{4}[A-Z]?/\d{4,5}[A-Z]?)”** Any of the standard ways to represent a fix can be used for this element (fix name, lat/long, or fix-radial-distance), including the standard airport designators.	**AB** **DFW** **KDFW** **SHP090015** **ATOKA300040** **3500N/04000W**	No
flight/operator/operatingOrganization/organization/@name	FDPS_FlightOperator/OPRIndicator_918f	Attribute used to specify the full official name of the State, Organization, Authority, aircraft operating agency, handling agency engaged in or offering to engage in aircraft operation.	ff:TextNameType	No	xs:string	UAL	No

DRAFT

Name [HP_FIXM]	Name [HP]	Element Definition	Type	Complex?	Format/Permissible Values	Example	Required?
flight/@system	propSourceSystem	This attribute indicates which SFDPS system generated the message.	fb:ProvenanceSystemType	No	xs:string maxLength=128	FDPS1	Yes
flight/@timestamp	propRcvdTime	This attribute conatins the time at which the message was received by SFDPS.	ff:TimeType	No	xs:dateTime	2015-12-18T22:19:02.028Z	Yes
flight/@centre	center	This attribute specifies the code of the ARTCC (or FIR) that produced the data.	fb:ProvenanceCentreType	No	xs:string	ZAU	Yes
flight/arrival/runwayPositionAndTime/runwayTime/actual/@time	arrivalTime	This attribute specifies the proposed or the actual time of arrival at destination, set according to the flight state.	ff:TimeType	No	xs:dateTime	2014-06-20T20:17:52	Yes
flight/departure/runwayPositionAndTime/runwayTime/estimated/@time	departureTime	This element specifies the proposed or actual departure time, set according to the flight state.	ff:TimeType	No	xs:dateTime	2014-06-20T20:17:52	Yes
flight/flightStatus/@fdpsFlightStatus	flightState	This attribute contains the current status of the flight as specified by SFDPS.	nas:SfdpsFlightStatusType	Yes	xs:string “PROPOSED|ACTIVE|COMPLETED|CANCELLED|DROPPED”	ACTIVE	Yes
flight/supplementalData/additionalFlightInformation/nameValue/@name flight/supplementalData/additionalFlightInformation/nameValue/@value	fdpsGufi	The name value pair specifies the SFDPS GUFI, an identifier on every message that positively identifies what flight the message is for.	fb:FreeTextType	No	xs:string @name: "FDPS_GUFI" @value: "us\.fdps\.\d{4}-\d{2}-\d{2}T\d{2}:\d{2}:\d{2}Z\.[A-Za-z0-9/]+"	name="FDPS_GUFI" value="us.fdps.2015-12-18T16:59:10Z.000/14/100"/>	Yes
flight/flightPlan/@identifier	eramGufi_316aFPId	This attribute specifies the unique flight plan identifier.	fb:FreeTextType	No	xs:string "[A-Z]{2}\d{5}[1-7]\d{2}"	"KU68378100"	No
flight/gufi	uuidGufi	This element contains a reference that uniquely	fb:GloballyFlightIdentifierType		xs:string	4aaf92be-	Yes

DRAFT

Name [HP_FIXM]	Name [HP]	Element Definition	Type	Complex?	Format/Permissible Values	Example	Required?
		identifies a flight and that is independent of any particular system. This reference conforms to the Universal Unique Identifier standard.			"[0-9a-fA-F]{8}\-[0-9a-fA-F]{4}\-4[0-9a-fA-F]{3}\-[89aAbB][0-9a-fA-F]{3}\-[0-9a-fA-F]{12}"	ac0a-4dba-998f-9e56f5d450b6	
flight/flightIdentification/@aircraftIdentification	flightId_02a	Name used by Air Traffic Services units to identify and communicate with an aircraft.	fb:FlightIdentifierType	No	**"[A-Z0-9]{7}"**	**AAL20**	Yes
flight/supplementalData/additionalFlightInformation/nameValue/@name flight/supplementalData/additionalFlightInformation/nameValue/@value		The flight supplemental data is used to indicate that a flight message is a test message, by setting the attribute *name* to "**SIMULATED_FLIGHT**" and the attribute *value* to "**true**".	*@name:* *@value*: *fb:FreeTextType*	No	*@name:* **"[A-Z0-9_]{1,20}"** *@value:* **xs:string** **minLength=1, maxLength=100** @name = **"SIMULATED_FLIGHT"** @value = **"true"**	@name = **"SIMULATED_FLIGHT"** @value = **"true"**	No
flight/flightIdentification/@computerId	computerId_02d	A unique identification assigned by ERAM to each flight plan.	fb:FreeTextType	No	**"([0-9][A-HJ-NP-Z0-9]{2})|([0-9]{2}[A-HJ-NP-Z0-9])"** The element includes a digit, followed by two alphanumeric characters with the exception of the letters **I** and **O**, such as *ddd, ddL, dLd, dLL*.	**020**	No
flight/flightIdentification/@siteSpecificPlanId	sspId_167a	Site Specific Plan Identifier. It is assigned by Instrument Flight Procedures Automation (IFPA) to uniquely identify a flight plan in each ERAM facility.	fb:CountType	No	**"\d{1,4}"** One to four-digits.	**24**	No
flight/coordination/coordinationFix	coordFix_06a	The fix to be used in	fb:SignificantPointType (abstract type)	Yes	- *fb:FixPointType*	**MDG**	Yes

DRAFT

Name [HP_FIXM]	Name [HP]	Element Definition	Type	Complex?	Format/Permissible Values	Example	Required?
		conjunction with the Coordination Time so that the processing for this flight (and its trajectory) can be synchronized for the next sector/facility.	*fb:FixPointType/* *ff:GeographicalLocationType/* *fb:RelativePointType*		**"[A-Z0-9]{2,5}"** - *ff:GeographicalLocationType* List of two **xs:double** (latitude followed by longitude) - *fb:RelativePointType* - fix: **"[A-Z0-9]{2,5}"** - distance: *ff:DistanceType* **xs:double** - radial: *fb:DirectionType* **xs:double** minInclusive = 0 maxInclusive =360		
flight/coordination/@coordinationTimeHandling	coordStatus_07d1	The indicator for the type of Coordination Time.	nas:CoordinationTimeType	No	**"(P|D|E|A)"** **"P"** = Proposed flight plan. **"D"** = Aircraft has departed from the departure airport. **"E"** = Active aircraft. **"A"** = Aircraft arrived at the destination airport.	**P**	Yes
flight/coordination/@coordinationTime	coordTime_07d2	Coordination Time: the time to be used in conjunction with the Coordination Fix so processing for this flight can be synchronized for the next sector/facility.	ff:TimeType	No	**dateTime**	**2015-07-27T20:17:52**	Yes
flight/coordination/@delayTimeToAbsorb	delayTime_07e	Delay time to absorb: indicates the amount of time that needs to be absorbed during the flight. It is corrective action for meeting the goal of Estimated Departure Clearance Time (EDCT), when the flight is	ff:DurationTime	No	**xs:duration**	**PT30M**	No

DRAFT

Name [HP_FIXM]	Name [HP]	Element Definition	Type	Complex?	Format/Permissible Values	Example	Required?
		already active and needs to arrive later than originally planned.					

5.5.1.38 Tentative Flight Plan Information [NP] – Data Elements

Element Name [NP]	Element Definition	Type	Complex?	Format/Permissible Values	Example	Required?
sourceId_00e	This element specifies the source identification that includes a UTC time followed by a four-digit sequence number.	string	No	**"\d{10}"** Ten digits, of which the first 6 digits represent the UTC time (*hhmmss*) and the last four-digits, represent the message sequence number in the range [0000-9999].	**2359359001**, where the first 6 digits are the UTC time (23:59:35 UTC) and the last 4 digits are sequence number of the message (9001).	Yes
sourceTime_00e1	This element specifies the time component of the previous element, sourceId_00e.	string	No	**"[0-2]\d_[0-5]\d_[0-5]\d"** Time in the format *hh_mm_ss,* where: *hh* stands for the 2-digit-hour in the range 00-23, *mm* stands for the 2-digit minutes in the range 00-59, and *ss* stands for the 2-digit seconds in the range 00-59.	**23_59_35** that represents 23:59:35 UTC	Yes
sourceSeqNo_00e2	This element specifies the message sequence number component of the sourceId_00e element.	string	No	**"\d{4}"** Four-digit number in the range [0000-9999].	**9001**	Yes
flightId_02a	Aircraft ID, or flight ID (also called Call Sign).	string	No	**"\+?[A-Z][A-Z0-9]{1,6}"** One uppercase alphabetic character followed by one to six alphanumeric characters.	**AAL20**	Yes
computerId_02d	ERAM Computer Identification (Computer ID).	string	No	**"([0-9][A-HJ-NP-Z0-9]{2})|** **([0-9]{2}[A-HJ-NP-Z0-9])"**	**020**	No

DRAFT

Element Name [NP]	Element Definition	Type	Complex?	Format/Permissible Values	Example	Required?
				The element includes a digit, followed by two alphanumeric characters with the exception of the letters **I** and **O**, as specified by the pattern above.		
eramGufi_316a	GUFI that uniquely identifies each flight in the system.	string	No	**"[A-Z]{2}\d{5}[1-7]\d{2}"** This element includes 10 alphanumeric characters: -ICAO country code (one letter); -en-route facility ID (one letter); -time in seconds of current day (five digits in the range 00000-86400); -sequence number (two digits).	**KB5980017**	No
sspId_167a	Site Specific Plan Identifier. It is assigned by IFPA to uniquely identify a flight plan in each ERAM facility.	string	No	**"\d{1,4}"** One to four-digits.	**24**	No
numberOfAircraft_03a	This element includes the number of aircraft for the flight followed optionally by the Special Aircraft Indicator.	string	No	**"\d{0,2}[A-Z]?"** The element consists of zero to two digits optionally followed by one uppercase letter to represent the Special Aircraft Indicator. The indicator can also appear on its own (without the leading digits).	**3H** The number of aircraft is 3 and the special aircraft indicator is **H** for Heavy Jet.	No
typeOfAircraft_03c	Type of aircraft.	string	No	**"[A-Z][A-Z0-9]{1,3}"** The element consists of one letter followed by one to three alphanumeric characters.	**B747**	Yes
airborneEquip_03e	Airborne equipment qualifier. It consists of one alphanumeric character.	string	No	**"[A-Z]"** The element consists of one alphanumeric character, that can have one of the following values: **A** - Transponder with no Mode C **B** - Transponder with Mode C	**E**	No

DRAFT

Element Name [NP]	Element Definition	Type	Complex?	Format/Permissible Values	Example	Required?
				E – FMS with DME/DME and IRU position updating **G** – GNSS, including GPS or WAAS, with en-route and terminal capability **X** – No transponder **W** - RVSM		
beaconCode_04a	Beacon code.	string	No	**"[0-7]{4}"** The element includes four octal digits (i.e. 0-7). When the last two digits of the four-digits are zero, the beacon code is a non-discrete code. A discrete code is any code not ending in 00.	Non-discrete VFR code: **2101**	No
trueAirSpeed_05a	True airspeed expressed in knots.	string	No	**"\d{2,4}"** The format is two to four-digits, in the range 01 – 3700 knots. Aircraft speed is required to be specified by using one of the three possible elements: trueAirSpeed_05a, machSpeed_05c or classifiedSpeed_05d.	**540** Aircraft true airspeed is 540 knots.	Yes, if neither machSpeed_05c nor classifiedSpeed_05d are included in the message.
machSpeed_05c	Mach speed.	string	No	**"M\d{3}"** The letter **M** followed by three digits. The maximum value is M500.	The speed 0.85 Mach is represented as **M085**.	Yes, if neither trueAirSpeed_05a nor classifiedSpeed_05dare included in the message.
classifiedSpeed_05d	Adapted classified speed. It is not printed on flight strips.	string	No	**"SC"**	This element may only include the string character **SC**.	Yes, if neither trueAirSpeed_05a nor machSpeed_05c are included in the message.
assignedAlt_08a	Assigned altitude or flight level expressed in hundreds of feet. Only one of the altitude elements	string	No	**"(\d{2,3}) | VFR"** The format consists of either two to three digits, or the constant string **VFR**.	Assigned altitude of 34,000 feet:	No

Element Name [NP]	Element Definition	Type	Complex?	Format/Permissible Values	Example	Required?
	assignedAlt_08a, assignedAlt_08b, assignedAlt_08c, assignedAlt_08d, assignedAlt_08e, assignedAlt_08f, assignedAlt_08g, assignedAlt_08h may be included in the message.			Three digits are required for ARTS III, thus a leading zero needs to be used when necessary.	**340** Assigned altitude 9,000 feet ARTS III: **090**	
assignedAlt_08b	Fixed value of **OTP** which indicates VFR-ON-Top. It specifies that the aircraft is flying above the clouds in VFR conditions. It may only be specified if none of the other assignedAtl_08 elements is included in the message.	string	No	**"OTP"**	Fixed value of **OTP.**	No
assignedAlt_08c	VFR-ON-Top with altitude. It represents an IFR flight operating above the clouds in VFR conditions at the specified assigned altitude. It may only be specified if none of the other assignedAtl_08 elements is included in the message.	string	No	"**OTP/\d{2,3}**" The format is the constant string **OTP**/ followed by two to three digits that represent the assigned altitude in hundreds of feet.	Aircraft flying VFR-ON-Top at 25,000 feet: **OTP/250**	No
assignedAlt_08d	The assigned block of altitudes for the flight to fly at. It may only be specified if none of the other assignedAtl_08 elements is included in the message.	string	No	**"\d{2,3}B\d{2,3}"** The format is two to three digits, followed by the letter **B**, followed by two to three digits. The leading and trailing two to three digits define the block of altitudes in hundreds of feet for the flight to fly at. The lowest altitude must be listed first.	Assigned altitude block of 8,000 feet to 14,000 feet: **80B140**	No
assignedAlt_08e	Element used for IFR flights operating above a specified altitude. It may only be specified if none of the other assignedAtl_08 elements is included in the message.	string	No	**"ABV/\d{2,3}"** The format consists of the string **ABV/** followed by two to three digits that represent the altitude in hundreds of feet above which the flight is flying.	Aircraft is flying above 60,000 feet. **ABV/600**	No
assignedAlt_08f	Assigned Altitude/FIX/Altitude element specifies the altitudes to and from a fix for the flight to fly at. It may only be specified if none of the	string	No	**"(\d{2,3}/[A-Z0-9]{2,5}/\d{2,3})| (\d{2,3}/[A-Z0-9]{2,5}\d{6}/\d{2,3}) | (\d{2,3}/\d{4}[A-Z]?/\d{4,5}[A-**	**240/DAL350010/220** Flight flies at altitude 24,000 feet to the fix radial distance fix	No

Element Name [NP]	Element Definition	Type	Complex?	Format/Permissible Values	Example	Required?
	other assignedAtl_08 elements is included in the message.			**Z]?/\d{2,3})"** The altitudes are specified in hundreds of feet in a two to three digit format. The fix is specified using the same format as the coordination fix element "coordFix_06a". The fix cannot be the departure or arrival point.	and then descend to altitude 22,000 feet.	
assignedAlt_08g	It is used to specify that the flight is flying Visual Flight Rules (VFR). It can only have the value **VFR**. It may only be specified if none of the other assignedAtl_08 elements is included in the message.	string	No	**"VFR"**	The string **VFR.**	No
assignedAlt_08h	It is used to specify that the flight is flying VFR at a specified altitude. It may only be specified if none of the other assignedAtl_08 elements is included in the message.	string	No	**"VFR/\d{2,3}"** The format consists of the string **VFR/** followed by two to three digits that represent an altitude in hundreds of feet.	**VFR/75** The aircraft is flying VFR at 7,500 feet.	No
reportedAlt_54a	The element is used to specify the reported altitude. For aircraft with operative Mode C capability, this element contains the Mode C altitude. For aircraft without Mode C capability or with non-operative Mode C capability, this element may contain the controller reported altitude. If there is no Mode C or controller reported altitude, or the reported altitude is negative, this element contains "0" or "000" or is optional.	string	No	**"\d{1,3}"** The format consists of one to three digits that represent the reported aircraft altitude in hundreds of feet. Leading zeroes may be inserted for altitudes of less than 3 digits.	**310** The aircraft reported altitude is 31,000 feet.	No
reportedAlt_54b	This field is the reported altitude B4 indicator. The ERAM controllers' full data block used for tracking an aircraft has a special indicator for the B4 character of the full data block.	string	No	**"[ABCFNTVX^v+-/]"** The format of this element is one character as follows: A - Reported altitude (controller entered) equals single assigned altitude.	**B**	No

DRAFT

Element Name [NP]	Element Definition	Type	Complex?	Format/Permissible Values	Example	Required?
				B - Beacon reported altitude is in conformance or controller entered reported altitude is in the block for an aircraft which has been assigned an altitude block (B1 to B3 - low altitude limit of block and C1 to C3=high altitude limit of block). C - Beacon reported altitude is within Altitude Conformance Limits feet. F - Reported altitude (controller entered) equals first altitude or (beacon reported) is within Altitude Conformance Limits of first altitude when assigned altitude is (d)dd/fix/(d)dd and the first altitude is displayed in Field B. N - No beacon reported altitude has been received for the aircraft; no controller entered reported altitude exists for the aircraft; or the aircraft's rate of change is questionable and Computed Rate of Change is being used to make further conformance checks. T - Interim altitude is currently being displayed in the assigned altitude field (B1 through B3). V - Beacon reported or controller entered reported altitude, when no assigned altitude exists for the aircraft. X - Beacon reported altitude becomes disestablished. (C1-C3 also contains `X' character.) ^ - Beacon reported or controller entered reported altitude is below assigned altitude when flight is climbing v - Beacon reported or controller entered reported altitude is above assigned altitude when flight is descending		

DRAFT

Element Name [NP]	Element Definition	Type	Complex?	Format/Permissible Values	Example	Required?
				+ - Beacon reported altitude exceeds upper conformance limit for an aircraft which has reached it assigned altitude or the controller entered reported altitude exceeds the assigned altitude for a non-Mode C aircraft which has previously been reported at the assigned altitude. - - Beacon reported altitude is less than lower conformance limit for an aircraft which has reached its assigned altitude or the controller entered reported altitude is less than the assigned altitude for a non-Mode C aircraft which has previously been reported at the assigned altitude. / - Flight type is `**OTP**' or `**VFR**'		
reportedAlt_54c	The element specifies the reported altitude C4 indicator. The ERAM controllers full data block used for tracking an aircraft has a special indicator for the C4 character of the full data block as follows: If the aircraft is not responding with the Mode C altitude, the controller entered reported altitude is displayed in *reportedAlt_54c* with a pound sign (#) or X in position C4 whenever (1) the controller entered reported altitude does not equal the assigned altitude or is not within the assigned altitude block, (2) no assigned altitude has been entered, or (3) the assigned altitude is VFR, VFR/(d)dd, OTP, or OTP/(d)dd. In either case for a Mode C reported altitude or a controller reported altitude, when an interim altitude is displayed in *reportedAlt_54b* the B4 character position contains the	string	No	**"[#X]"**	**#**	No

Element Name [NP]	Element Definition	Type	Complex?	Format/Permissible Values	Example	Required?
	letter "T" and the reported altitude, or either the lower or upper altitude of an assigned block altitude is displayed in *reportedAlt_54c*. In the case where a controller entered reported altitude exists, a pound sign (#) or X is displayed in the C4 position.					
interimAlt_76b	This element specifies the interim altitude for the flight in hundreds of feet. It is included in the message if an interim altitude is assigned.	string	No	**"\d{1,3}"**	**240**	No

DRAFT

5.5.1.39 Tentative Flight Plan Information [NP] - Diagram

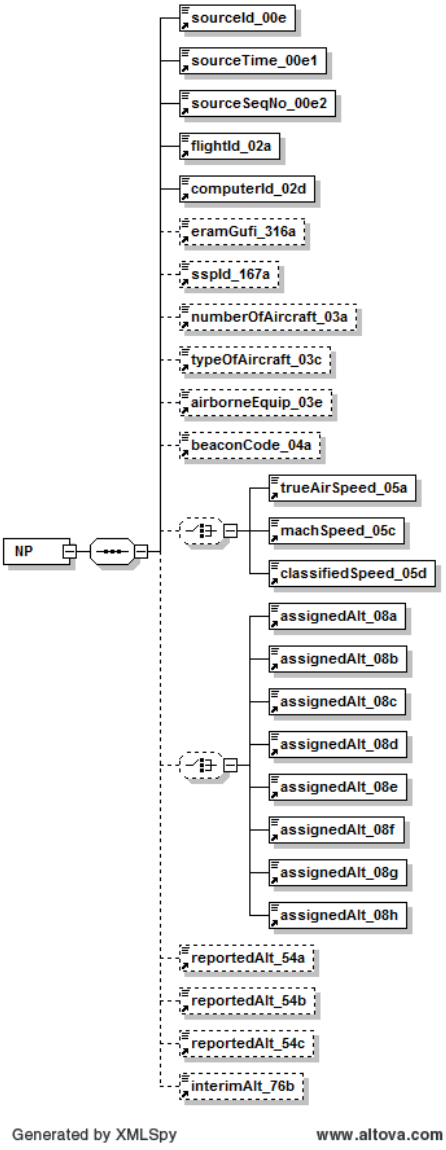

5.5.1.40 Tentative Flight Plan Information in FIXM Format [NP_FIXM] – Data Elements

The following elements of the NP message in Simple XML format are not translated in the FIXM format of the message:

- sourceId_00e
- sourceTime_00e1
- sourceSeqNo_00e2
- eramGufi_316a
- reportedAlt_54b
- reportedAlt_54c

Name [NP_FIXM]	Name [NP]	Element Definition	Type	Complex?	Format/Permissible Values	Example	Required?
flight/supplementalData/additionalFlightInformation/nameValue/@name flight/supplementalData/additionalFlightInformation/nameValue/@value	*FDPS_SequenceNo*	Sequence number assigned by SFDPS to each message it receives from HADDS. The attribute *name* includes the constant string "MSG_SEQ_NO", and the attribute *value* contains the sequence number value.	@name: @value: fb:FreeTextType	No	@name: ”MSG_SEQ_NO” @value: xs:nonNegativeInteger xs:maxInclusive value="999999999"	@name="MSG_SEQ_NO" @value="6860416"	Yes
flight/departure/@departurePoint	*FDPS_Origin/departurePoint_26a*	Attribute used to specify the first point or other initial entity where the air traffic control/management system route starts.	fb:FreeTextType	No	xs:string minLength=2, maxLength=12 **"([A-Z0-9]{2,5}) |** **([A-Z0-9]{2,5}\d{6}) |** **(\d{4}[A-Z]?/\d{4,5}[A-Z]?)”** Any of the standard ways to represent a fix can be used for this element (fix name, lat/long, or fix-radial-distance), including the standard airport designators.	**AB** **DFW** **KDFW** **SHP090015** **ATOKA300040** **3500N/04000W**	No
flight/arrival/@arrivalPoint	*FDPS_Destld/destination_27a*	The final point or other final entity where the air traffic control/management system route terminates.	fb:FreeTextType	No	xs:string minLength=2, maxLength=12 **"([A-Z0-9]{2,5}) |** **([A-Z0-9]{2,5}\d{6}) |** **(\d{4}[A-Z]?/\d{4,5}[A-Z]?)”** Any of the standard ways to represent a fix can be	**AB** **DFW** **KDFW** **SHP090015** **ATOKA300040**	No

Name [NP_FIXM]	Name [NP]	Element Definition	Type	Complex?	Format/Permissible Values	Example	Required?
					used for this element (fix name, lat/long, or fix-radial-distance), including the standard airport designators.	**3500N/04000W**	
flight/operator/operatingOrganization/organization/@name	*FDPS_FlightOperator/OPRIndicator_918f*	Attribute used to specify the full official name of the State, Organization, Authority, aircraft operating agency, handling agency engaged in or offering to engage in aircraft operation.	ff:TextNameType	No	xs:string	UAL	No
flight/@system	propSourceSystem	This attribute indicates which SFDPS system generated the message.	fb:ProvenanceSystemType	No	xs:string maxLength=128	FDPS1	Yes
flight/@timestamp	propRcvdTime	This attribute conatins the time at which the message was received by SFDPS.	ff:TimeType	No	xs:dateTime	2015-12-18T22:19:02.028Z	Yes
flight/@centre	center	This attribute specifies the code of the ARTCC (or FIR) that produced the data.	fb:ProvenanceCentreType	No	xs:string	ZAU	Yes
flight/arrival/runwayPositionAndTime/runwayTime/estimated/@time	arrivalTime	This attribute specifies the proposed or the actual time of arrival at destination, set according to the flight state.	ff:TimeType	No	xs:dateTime	2014-06-20T20:17:52	Yes
flight/departure/runwayPositionAndTime/runwayTime/estimated/@time	departureTime	This element specifies the proposed or actual departure time, set according to the flight state.	ff:TimeType	No	xs:dateTime	2014-06-20T20:17:52	Yes
flight/flightStatus/@fdpsFlightStatus	flightState	This attribute contains the current status of the flight as specified by SFDPS.	nas:SfdpsFlightStatusType	Yes	xs:string “PROPOSED|ACTIVE|COMPLETED|CANCELLED|DROPPED”	ACTIVE	Yes
flight/supplementalData/additionalFlightInformation/nameValue/@name flight/supplementalData/additionalFlightInformation/nameValu	fdpsGufi	The name value pair specifies the SFDPS GUFI, an identifier on every message that positively identifies what flight the message is for.	fb:FreeTextType	No	xs:string @name: "FDPS_GUFI" @value:	name="FDPS_GUFI" value="us.fdps.2015-	Yes

DRAFT

Name [NP_FIXM]	Name [NP]	Element Definition	Type	Complex?	Format/Permissible Values	Example	Required?
e/@value					"us\.fdps\.\d{4}-\d{2}-\d{2}T\d{2}:\d{2}:\d{2}Z\.[A-Za-z0-9/]+"	12-18T16:59:10Z.000/14/100"/>	
flight/flightPlan/@identifier	eramGufi_316aFPId	This attribute specifies the unique flight plan identifier.	fb:FreeTextType	No	xs:string "[A-Z]{2}\d{5}[1-7]\d{2}"	"KU68378100"	No
flight/gufi	uuidGufi	This element contains a reference that uniquely identifies a flight and that is independent of any particular system. This reference conforms to the Universal Unique Identifier standard.	fb:GloballyFlightIdentifierType		xs:string "[0-9a-fA-F]{8}\-[0-9a-fA-F]{4}\-4[0-9a-fA-F]{3}\-[89aAbB][0-9a-fA-F]{3}\-[0-9a-fA-F]{12}"	4aaf92be-ac0a-4dba-998f-9e56f5d450b6	Yes
flight/flightIdentification/@aircraftIdentification	flightId_02a	Name used by Air Traffic Services units to identify and communicate with an aircraft.	fb:FlightIdentifierType	No	**"[A-Z0-9]{7}"**	**AAL20**	Yes
flight/supplementalData/additionalFlightInformation/nameValue/@name flight/supplementalData/additionalFlightInformation/nameValue/@value		The flight supplemental data is used to indicate that a flight message is a test message, by setting the attribute *name* to "**SIMULATED_FLIGHT**" and the attribute *value* to "**true**".	*@name:* *@value*: *fb:FreeTextType*	No	*@name:* **"[A-Z0-9_]{1,20}"** *@value:* **xs:string** **minLength=1, maxLength=100** @name = **"SIMULATED_FLIGHT"** @value = **"true"**	@name = **"SIMULATED_FLIGHT"** @value = **"true"**	No
flight/flightIdentification/@siteSpecificPlanId	sspId_167a	Site Specific Plan Identifier. It is assigned by Instrument Flight Procedures Automation (IFPA) to uniquely identify a flight plan in each ERAM facility.	fb:CountType	No	**"\d{1,4}"** One to four-digits.	**24**	No
flight/aircraftDescription/@aircraftQuantity	numberOfAircraft_03a	This element includes the number of aircraft for the flight.	fb:countType	No	**"\d{0,2}"** The element consists of zero to two digits.	**3**	No

DRAFT

Name [NP_FIXM]	Name [NP]	Element Definition	Type	Complex?	Format/Permissible Values	Example	Required?
flight/aircraftDescription/@tfmsSpecialAircraftQualifier	numberOfAircraft_03a- Special Aircraft Indicator	This element includes the Special Aircraft Indicator. It indicates the flight is a heavy jet, B757 or, if not present, a large jet and if the flight is either equipped or not with TCAS. This indicator is used for output purposes such as strip printing and message transfers to other facilities such as Automated Radar Terminal System (ARTS). NOTE TFMS Special Aircraft Qualifier is a bad fit to Special Aircraft Indicator but no other fields seem to fit.	nas:NasSpecialAircraftQualifierType	No	**"HEAVY_JET|TCAS|B757|HEAVY_JET_AND_TCAS"** **"HEAVY_JET"** = Capable of takeoff weights of 300,000 pounds or more **"TCAS"** = Traffic collision avoidance system or traffic alert and collision avoidance system **"B757"** = Controllers are required to apply the special wake turbulence separation criteria for the Boeing 757. **"HEAVY_JET_AND_TCAS"** = Capable of takeoff weights of 300,000 pounds or more and traffic collision avoidance system.	**HEAVY_JET**	No
flight/aircraftDescription/aircraftType/icaoModelIdentifier	typeOfAircraft_03c	The ICAO code of the aircraft type.	fb:IcaoAircraftIdentifierType	No	**"[A-Z][A-Z0-9]{1,3}"** The element consists of one letter followed by one to three alphanumeric characters.	**B747**	Yes

DRAFT

Name [NP_FIXM]	Name [NP]	Element Definition	Type	Complex?	Format/Permissible Values	Example	Required?
flight/aircraftDescription/@equipmentQualifier	airborneEquip_03e	Airborne equipment qualifier. A value assigned to the aircraft, based on its navigational equipment, whether or not it has a transponder, and if it has a transponder, whether the transponder supports Mode C.	nas:NasAirborneEquipmentQualifierType	No	**" [ABCDGHILMNPSTUVWXYZ]"** The element consists of one alphanumeric character, that can have one of the following values: • "X"= No RVSM, No DME, No transponder • "T"= No RVSM, No DME, Transponder with no mode C • "U"= No RVSM, No DME: Transponder with mode C • "D"= DME: No transponder • "B"= DME: Transponder with no mode C • "A"= DME: Transponder with mode • "M"= TACAN ONLY: No transponder • "N"= TACAN ONLY: Transponder with no mode C • "P"= TACAN ONLY: Transponder with mode C • "C"= "Y"= LORAN,VORDME,INS,RNAV: No transponder • "I"= LORAN,VORDME,INSRNAV: Transponder with mode C • "H"= RVSM, Failed transponder or Failed Mode C capability • "S=ADVANCED RNAV, TRANSPONDER, MODE C: FMS with DMEDME position updating • "G"= ADVANCED RNAV, TRANSPONDER, MODE C: Global Navigation Satellite System (GNSS), including GPS or Wide Area Augmentation System (WAAS), with enroute and terminal capability • "V"= ADVANCED RNAV, TRANSPONDER, MODE C: Required Navigational Performance (RNP). The aircraft meets the RNP type prescribed for the route segments, routes and/or area concerned. • "Z"= REDUCED VERTICAL SEPARATION MINIMUM (RVSM): E with RVSM	**E**	No

DRAFT

Name [NP_FIXM]	Name [NP]	Element Definition	Type	Complex?	Format/Permissible Values	Example	Required?
					• "L"= REDUCED VERTICAL SEPARATION MINIMUM (RVSM): G with RVSM "W"= REDUCED VERTICAL SEPARATION MINIMUM (RVSM): RVSM		
flight/enRoute/beaconCodeAssignment/currentBeaconCode	beaconCode_04a	The current assigned four-character numeric code transmitted by the aircraft transponder in response to a secondary surveillance radar interrogation signal which is used to assist air traffic controllers to identify aircraft.	fb:BeaconCodeType	No	"[0-7]{4}" The element includes four octal digits (i.e. 0-7). When the last two digits of the four-digits are zero, the beacon code is a non-discrete code. A discrete code is any code not ending in 00.	Non-discrete VFR code: **2101**	No
flight/requestedAirspeed/nasAirspeed flight/requestedAirspeed/@uom	trueAirSpeed_05a machSpeed_05c	The aircraft speed expressed in either true airspeed or mach.	nasAirspeed: ff: TrueAirSpeedOrMachType uom: ff:AirspeedMeasureType	No	nasAirspeed: **"xs:double"** uom: **"KILOMETERS_PER_HOUR|KNOTS|MACH"** This element is required if requestedAirspeed/classifed is not included in the message.	nasAirspeed: **540** uom: **KNOTS**	Yes
flight/requestedAirspeed/classified	classifiedSpeed_05d	Classified Speed Indicator. It indicates that the speed for this flight is classified and is not to be recorded.	nas:ClassifiedSpeedIndicatorType	No	**"CLASSIFIED"** This element is required if requestedAirspeed/nasAirspeed not included in the message.	**CLASSIFIED**	Yes
flight/assignedAltitude/simple flight/assignedAltitude/simple/@uom flight/assignedAltitude/simple/@ref	assignedAlt_08a	Simple altitude: single measurement above reference point. It represents the only NAS altitude that maps directly to the core ICAO altitude types.	assignedAltitude/simple: nas:SimpleAltitudeType uom: ff:AltitudeMeasureType ref: ff:AltitudeReferenceType	Yes	**"xs:double"** uom: "**FEET|METERS**" ref: **"MEAN_SEA_LEVEL| FLIGHT_LEVEL"** Only one of the altitude elements *simple*, *vfrOnTop*, *vfrOnTopPlus*, *block*, *above*, *altFixAlt*, *vfr*, *vfrPlus* may be included in the message.	Assigned altitude of 34,000 feet: **34000** Uom: **FEET** Ref: **MEAN_SEA_LEVEL**	No
flight/assignedAltitude/vfrOnTo	assignedAl	The presence of this element indicates	Nas:VfrOnTopAltit	Yes	Empty element.		No

Name [NP_FIXM]	Name [NP]	Element Definition	Type	Complex?	Format/Permissible Values	Example	Required?
p	t_08b	VFR-ON-Top. It specifies that the aircraft is flying above the clouds in VFR conditions.	udeType		Only one of the altitude elements *simple*, *vfrOnTop*, *vfrOnTopPlus*, *block*, *above*, *altFixAlt*, *vfr*, *vfrPlus* may be included in the message.		
flight/assignedAltitude/vfrOnTopPlus flight/assignedAltitude/vfrOnTopPlus/@uom	assignedAlt_08c	VFR-ON-Top with altitude. It represents an Instrument Flight Rules (IFR) flight operating above the clouds in VFR conditions at the specified assigned altitude.	nas:VfrOnTopPlusAltitudeType	No	**"xs:double"** uom: **"FEET|METRES"** Only one of the altitude elements *simple*, *vfrOnTop*, *vfrOnTopPlus*, *block*, *above*, *altFixAlt*, *vfr*, *vfrPlus* may be included in the message.	Aircraft flying VFR-ON-Top at 25,000 feet: **25000** uom: **feet**	No
flight/assignedAltitude/block/above flight/assignedAltitude/block/above/@uom	assignedAlt_08d	The bottom level of the assigned block of altitudes for the flight to fly at.	ff:AltitudeType	Yes	**"xs:double"** uom: **"FEET|METRES"** Only one of the altitude elements *simple*, *vfrOnTop*, *vfrOnTopPlus*, *block*, *above*, *altFixAlt*, *vfr*, *vfrPlus* may be included in the message.	*above:* **8000** *uom:* **FEET**	No
flight/assignedAltitude/block/below flight/assignedAltitude/block/below/@uom	assignedAlt_08d	The top level of the assigned block of altitudes for the flight to fly at.	ff:AltitudeType	Yes	**"xs:double"** uom: **"FEET|METRES"** Only one of the altitude elements *simple*, *vfrOnTop*, *vfrOnTopPlus*, *block*, *above*, *altFixAlt*, *vfr*, *vfrPlus* may be included in the message.	*below:* **14000** *uom:* **FEET**	No
flight/assignedAltitude/above flight/assignedAltitude/above/@uom	assignedAlt_08e	Element used for IFR flights operating above a specified altitude.	nas:AboveAltitudeType	Yes	**"xs:double"** uom: **"FEET|METRES"** Only one of the altitude elements *simple*, *vfrOnTop*, *vfrOnTopPlus*, *block*, *above*, *altFixAlt*, *vfr*, *vfrPlus* may be included in the message.	Aircraft is flying above 60,000 feet: **60000** **uom:** **FEET**	No
flight/assignedAltitude/altFixAlt/point	assignedAlt_08f	*assignedAltitude/altFixAlt* element is defined as an altitude prior to a specified fix, the specified fix itself, and altitude post specified fix. The element	fb:SignificantPointType (abstract type) *fb:FixPointType/*	Yes	- *fb:FixPointType* **"[A-Z0-9]{2,5}"** - *ff:GeographicalLocationType* List of two **xs:double** (latitude followed by	**MDG**	No

Name [NP_FIXM]	Name [NP]	Element Definition	Type	Complex?	Format/Permissible Values	Example	Required?
		altFixAlt/point defines the specified fix associated with the altitude. The fix cannot be the departure or arrival point.	*ff:GeographicalLocationType/ fb:RelativePointType*		longitude) - *fb:RelativePointType* - fix: **"[A-Z0-9]{2,5}"** - distance: *ff:DistanceType* **xs:double** - radial: *fb:DirectionType* **xs:double** minInclusive = 0 maxInclusive =360 Only one of the altitude elements *simple*, *vfrOnTop*, *vfrOnTopPlus*, *block*, *above*, *altFixAlt*, *vfr*, *vfrPlus* may be included in the message.		
flight/assignedAltitude/altFixAlt/pre flight/assignedAltitude/altFixAlt/pre/@uom	assignedAlt_08f	*assignedAltitude/altFixAlt* element is defined as an altitude prior to a specified fix, the specified fix itself, and altitude post specified fix. The element *altFixAlt/pre* defines the altitude before the specified fix.	ff:AltitudeType	Yes	**"xs:double"** uom: **"FEET|METRES"** Only one of the altitude elements *simple*, *vfrOnTop*, *vfrOnTopPlus*, *block*, *above*, *altFixAlt*, *vfr*, *vfrPlus* may be included in the message.	**240000** **uom:** **FEET**	No
flight/assignedAltitude/altFixAlt/post flight/assignedAltitude/altFixAlt/post/@uom	assignedAlt_08f	*assignedAltitude/altFixAlt* element is defined as an altitude prior to a specified fix, the specified fix itself, and altitude post specified fix. The element *altFixAlt/pre* defines the altitude after the specified fix.	ff:AltitudeType	Yes	**"xs:double"** uom: **"FEET|METRES"** Only one of the altitude elements *simple*, *vfrOnTop*, *vfrOnTopPlus*, *block*, *above*, *altFixAlt*, *vfr*, *vfrPlus* may be included in the message.	**22000** **uom:** **FEET**	No.
flight/assignedAltitude/vfr	assignedAlt_08g	Its presence in the message specifies that the flight is flying Visual Flight Rules (VFR).	nas:VfrAltitudeType	Yes	**Empty element** Only one of the altitude elements *simple*, *vfrOnTop*, *vfrOnTopPlus*, *block*, *above*, *altFixAlt*, *vfr*, *vfrPlus* may be included in the message.		No
flight/assignedAltitude/vfrPlus flight/assignedAltitude/vfrPlus/@uom	assignedAlt_08h	It is used to specify that the flight is flying VFR at a specified altitude.	nas:VfrPlusAltitudeType	Yes	**"xs:double"** uom: **"FEET|METRES"** Only one of the altitude elements *simple*, *vfrOnTop*,	The aircraft is flying VFR at 7,500 feet:	No

DRAFT

Name [NP_FIXM]	Name [NP]	Element Definition	Type	Complex?	Format/Permissible Values	Example	Required?
					vfrOnTopPlus, *block*, *above*, *altFixAlt*, *vfr*, *vfrPlus* may be included in the message.	**7500** uom: **feet**	
flight/enRoute/position/altitude flight/enRoute/position/altitude/@uom	reportedAlt_54a	The element is used to specify the reported altitude. For aircraft with operative Mode C capability, this element contains the Mode C altitude. For aircraft without Mode C capability or with non-operative Mode C capability, this element may contain the controller reported altitude.	ff:AltitudeType	Yes	**xs:double** **@uom:** **"FEET|METRES"**	**31000** **FEET** The aircraft reported altitude is 31,000 feet.	No
flight/interimAltitude flight/interimAltitude/@uom	interimAlt_76b	This element specifies the interim altitude the flight is cleared to maintain different from that in the flight plan. The attribute *uom* specifies the unit of measure for the *interimAltitude* element: FEET/METRES.	Type of *interimAltitude*: nas:SimpleAltitudeType Type of *interimAltitude/@uom:* *ff:AltitudeMeasureType*	Yes @uom: No	*interimAltitude*: xs:double *@uom:* **"FEET|METRES"**	**240000** **FEET**	No

5.5.1.41 Tentative Aircraft Identification Amendment Information [NI] – Data Elements

Element Name [NI]	Element Definition	Type	Complex?	Format/Permissible Values	Example	Required?
sourceId_00e	This element specifies the source identification that includes a UTC time followed by a four-digit sequence number.	string	No	**"\d{10}"** Ten digits, of which the first 6 digits represent the UTC time (*hhmmss*) and the last four-digits, represent the message sequence number in the range [0000-9999].	**2359359001**, where the first 6 digits are the UTC time (23:59:35 UTC) and the last 4 digits are sequence number of the message (9001).	Yes

Element Name [NI]	Element Definition	Type	Complex?	Format/Permissible Values	Example	Required?
sourceTime_00e1	This element specifies the time component of the previous element, sourceId_00e.	string	No	**"[0-2]\d_[0-5]\d_[0-5]\d"** Time in the format *hh_mm_ss*, where: *hh* stands for the 2-digit-hour in the range 00-23, *mm* stands for the 2-digit minutes in the range 00-59, and *ss* stands for the 2-digit seconds in the range 00-59.	**23_59_35** that represents 23:59:35 UTC	Yes
sourceSeqNo_00e2	This element specifies the message sequence number component of the sourceId_00e element.	string	No	**"\d{4}"** Four-digit number in the range [0000-9999].	**9001**	Yes
flightId_02a	Aircraft ID, or flight ID (also called Call Sign).	string	No	**"\+?[A-Z][A-Z0-9]{1,6}"** One uppercase alphabetic character followed by one to six alphanumeric characters.	AAL20	Yes
computerId_02d	ERAM Computer Identification (Computer ID).	string	No	**"([0-9][A-HJ-NP-Z0-9]{2})| ([0-9]{2}[A-HJ-NP-Z0-9])"** The element includes a digit, followed by two alphanumeric characters with the exception of the letters **I** and **O**, as specified by the pattern above.	**020**	No
sspId_167a	Site Specific Plan Identifier. It is assigned by IFPA to uniquely identify a flight plan in each ERAM facility.	string	No	**"\d{1,4}"** One to four-digits.	**24**	No
newFlightId_02aN	The new Aircraft ID, or flight ID (also called Call Sign), that has been changed by the NI message.	string	No	**"\+?[A-Z][A-Z0-9]{1,6}"** It has a variable format, starting with one uppercase alphabetic character, followed by one to six alphanumeric characters. When it is only two characters long, the format must be one letter followed by one digit, such as A1 for Air Force One.	**DAL52**	Yes
newComputerId_02d	This element contains the new	string	No	**"([0-9][A-HJ-NP-Z0-9]{2}) |**	**436**	No

DRAFT

Element Name [NI]	Element Definition	Type	Complex?	Format/Permissible Values	Example	Required?
N	Computer ID that has been changed by the NI message.			**([A-HJ-NP-Z]{3}) | ([0-9]{2}[A-HJ-NP-Z0-9])"** The computer ID is represented by three alphanumeric characters, as specified by the pattern above. The letters **I** and **O** are prohibited. One special all alphabetic code may be used, literally, XXX. This is only used in DA (Data Accept) messages in response to an ARTS VFR flight plan input.		
newSspId_167aN	This element contains the new Site Specific Plan Identifier that has been changed by the NI message.	string	No	**"\d{1,4}"** The format consists of one- to four-digit string in a range from 0 – 4000.	32	No

DRAFT

5.5.1.42 Tentative Aircraft Identification Amendment Information [NI] - Diagram

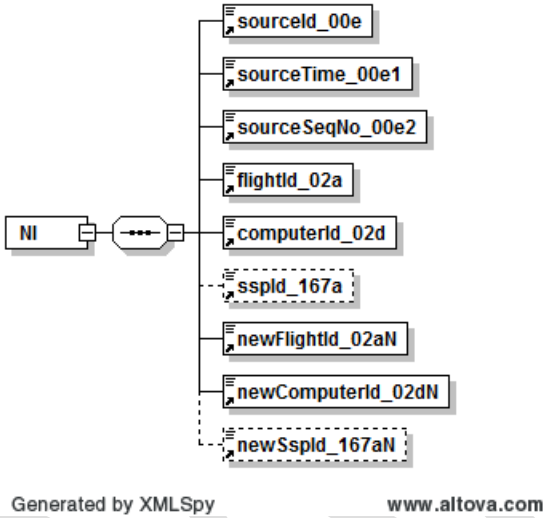

5.5.1.43 Tentative Aircraft Identification Amendment Information Message in FIXM Format [NI_FIXM] – Data Elements

The following elements of the NI message in Simple XML format are not translated in the FIXM format of the message:

- sourceId_00e
- sourceTime_00e1
- sourceSeqNo_00e2

Name [NI_FIXM]	Name [NI]	Definition	Type	Complex?	Format/Permissible Values	Example	Required?
flight/flightIdentificationPrevious/@aircraftIdentification	flightId_02a	Name used by Air Traffic Services units to identify and communicate with an aircraft.	fb:FlightIdentifierType	No	**"[A-Z0-9]{7}"**	**AAL20**	Yes

Name [NI_FIXM]	Name [NI]	Definition	Type	Complex?	Format/Permissible Values	Example	Required?
flight/supplementalData/additionalFlightInformation/nameValue/@name flight/supplementalData/additionalFlightInformation/nameValue/@value	FDPS_SequenceNo	Sequence number assigned by SFDPS to each message it receives from HADDS. The attribute *name* includes the constant string "MSG_SEQ_NO", and the attribute *value* contains the sequence number value.	@name: @value: fb:FreeTextType	No	@name: "MSG_SEQ_NO" @value: xs:nonNegativeInteger xs:maxInclusive value="999999999"	@name="MSG_SEQ_NO" @value="6860416"	Yes
flight/departure/@departurePoint	FDPS_Origin/departurePoint_26a	Attribute used to specify the first point or other initial entity where the air traffic control/management system route starts.	fb:FreeTextType	No	xs:string minLength=2, maxLength=12 **"([A-Z0-9]{2,5}) | ([A-Z0-9]{2,5}\d{6}) | (\d{4}[A-Z]?/\d{4,5}[A-Z]?)"** Any of the standard ways to represent a fix can be used for this element (fix name, lat/long, or fix-radial-distance), including the standard airport designators.	**AB** **DFW** **KDFW** **SHP090015** **ATOKA** **3000403500N/04000W**	No
flight/arrival/@arrivalPoint	FDPS_DestId/destination_27a	The final point or other final entity where the air traffic control/management system route terminates.	fb:FreeTextType	No	xs:string minLength=2, maxLength=12 **"([A-Z0-9]{2,5}) | ([A-Z0-9]{2,5}\d{6}) | (\d{4}[A-Z]?/\d{4,5}[A-Z]?)"** Any of the standard ways to represent a fix can be used for this element (fix name, lat/long, or fix-radial-distance), including the standard airport designators.	**AB** **DFW** **KDFW** **SHP090015** **ATOKA** **3000403500N/04000W**	No
flight/operator/operatingOrganization/organization/@name	FDPS_FlightOpe	Attribute used to specify the full official name of the State,	ff:TextNameType	No	xs:string	UAL	No

DRAFT

Name [NI_FIXM]	Name [NI]	Definition	Type	Complex?	Format/Permissible Values	Example	Required?
	rator/OPRIndicator_918f	Organization, Authority, aircraft operating agency, handling agency engaged in or offering to engage in aircraft operation.					
flight/@system	propSourceSystem	This attribute indicates which SFDPS system generated the message.	fb:ProvenanceSystemType	No	xs:string maxLength=128	FDPS1	Yes
flight/@timestamp	propRcvdTime	This attribute conatins the time at which the message was received by SFDPS.	ff:TimeType	No	xs:dateTime	2015-12-18T22:19:02.028Z	Yes
flight/@centre	center	This attribute specifies the code of the ARTCC (or FIR) that produced the data.	fb:ProvenanceCentreType	No	xs:string	ZAU	Yes
flight/arrival/runwayPositionAndTime/runwayTime/[estimated|actual]/@time	arrivalTime	This attribute specifies the proposed or the actual time of arrival at destination, set according to the flight state.	ff:TimeType	No	xs:dateTime	2014-06-20T20:17:52	Yes
flight/departure/runwayPositionAndTime/runwayTime/[actual|estimated]/@time	departureTime	This element specifies the proposed or actual departure time, set according to the flight state.	ff:TimeType	No	xs:dateTime	2014-06-20T20:17:52	Yes
flight/flightStatus/@fdpsFlightStatus	flightState	This attribute contains the current status of the flight as specified by SFDPS.	nas:SfdpsFlightStatusType	Yes	xs:string "PROPOSED|ACTIVE|COMPLETED|CANCELLED|DROPPED"	ACTIVE	Yes
flight/supplementalData/additionalFlightInformation/nameValue/@name flight/supplementalData/additionalF	fdpsGufi	The name value pair specifies the SFDPS GUFI, an identifier on every message that positively identifies what flight the message is for.	fb:FreeTextType	No	xs:string @name: "FDPS_GUFI"	name="FDPS_GUFI" value=""	Yes

DRAFT

Name [NI_FIXM]	Name [NI]	Definition	Type	Complex?	Format/Permissible Values	Example	Required?
lightInformation/nameValue/@value					@value: "us\.fdps\.\d{4}-\d{2}-\d{2}T\d{2}:\d{2}:\d{2}Z\.[A-Za-z0-9/]+"	us.fdps.2015-12-18T16:59:10Z.000/14/100"/>	
flight/flightPlan/@identifier	eramGufi_316aFPId	This attribute specifies the unique flight plan identifier.	fb:FreeTextType	No	xs:string "[A-Z]{2}\d{5}[1-7]\d{2}"	"KU68378100"	No
flight/gufi	uuidGufi	This element contains a reference that uniquely identifies a flight and that is independent of any particular system. This reference conforms to the Universal Unique Identifier standard.	fb:GloballyFlightIdentifierType		xs:string "[0-9a-fA-F]{8}\-[0-9a-fA-F]{4}\-4[0-9a-fA-F]{3}\-[89aAbB][0-9a-fA-F]{3}\-[0-9a-fA-F]{12}"	4aaf92be-ac0a-4dba-998f-9e56f5d450b6	Yes
flight/flightIdentificationPrevious/@computerId	computerId_02d	A unique identification assigned by ERAM to each flight plan.	fb:FreeTextType	No	**"([0-9][A-HJ-NP-Z0-9]{2})|([0-9]{2}[A-HJ-NP-Z0-9])"** The element includes a digit, followed by two alphanumeric characters with the exception of the letters **I** and **O**, such as *ddd, ddL, dLd, dLL*.	**020**	No
flight/flightIdentificationPrevious/@siteSpecificPlanId	sspId_167a	Site Specific Plan Identifier. It is assigned by Instrument Flight Procedures Automation (IFPA) to uniquely identify a flight plan in each ERAM facility.	fb:CountType	No	**"\d{1,4}"** One to four-digits.	**24**	No
flight/flightIdentification/@aircraftIdentification	newFlightId_02aN	The new Aircraft ID, or flight ID (also called Call Sign), that has been changed by the NI_FIXM message.	fb:FlightIdentifierType	No	**"[A-Z0-9]{7}"**	**AAL100**	Yes

DRAFT

Name [NI_FIXM]	Name [NI]	Definition	Type	Complex?	Format/Permissible Values	Example	Required?
flight/supplementalData/additionalFlightInformation/nameValue/@name flight/supplementalData/additionalFlightInformation/nameValue/@value		The flight supplemental data is used to indicate that a flight message is a test message, by setting the attribute *name* to "**SIMULATED_FLIGHT**" and the attribute *value* to "**true**".	*@name:* *@value*: *fb:FreeTextType*	No	*@name:* **"[A-Z0-9_]{1,20}"** *@value:* **xs:string minLength=1, maxLength=100** @name = **"SIMULATED_FLIGHT"** @value = **"true"**	@name = **"SIMULATED_FLIGHT"** @value = **"true"**	No
flight/flightIdentification/@computerId	newComputerId_02dN	This element contains the new Computer ID that has been changed by the NI_FIXM message.	fb:FreeTextType	No	**"([0-9][A-HJ-NP-Z0-9]{2})| ([0-9]{2}[A-HJ-NP-Z0-9])"** The element includes a digit, followed by two alphanumeric characters with the exception of the letters **I** and **O**, such as *ddd, ddL, dLd, dLL*.	**030**	No
flight/flightIdentification/@siteSpecificPlanId	newSspId_167aN	This element contains the new Site Specific Plan Identifier that has been changed by the NI_FIXM message.	fb:CountType	No	**"\d{1,4}"** One to four-digits.	**32**	No

5.5.1.44 Tentative Flight Plan Removal [NL] – Data Elements

Element Name [NL]	Element Definition	Type	Complex?	Format/Permissible Values	Example	Required?
sourceId_00e	This element specifies the source identification that includes a UTC time followed by a four- digit sequence number.	string	No	**"\d{10}"** Ten digits, of which the first 6 digits represent the UTC time (*hhmmss*) and the last four digits,	**2359359001**, where the first 6 digits are the UTC time (23:59:35 UTC) and	Yes

Element Name [NL]	Element Definition	Type	Complex ?	Format/Permissible Values	Example	Required?
				represent the message sequence number in the range [0000-9999].	the last 4 digits are sequence number of the message (9001).	
sourceTime_00e1	This element specifies the time component of the previous element, sourceId_00e.	string	No	**"[0-2]\d_[0-5]\d_[0-5]\d"** Time in the format *hh_mm_ss*, where: *hh* stands for the 2-digit-hour in the range 00-23, *mm* stands for the 2-digit minutes in the range 00-59, and *ss* stands for the 2-digit seconds in the range 00-59.	23_59_35 that represents 23:59:35 UTC	Yes
sourceSeqNo_00e2	This element specifies the message sequence number component of the sourceId_00e element.	string	No	**"\d{4}"** Four-digit number in the range [0000-9999].	9001	Yes
flightId_02a	Aircraft ID, or flight ID (also called Call Sign).	string	No	**"\+?[A-Z][A-Z0-9]{1,6}"** One upper-case alphabetic character followed by one to six alphanumeric characters.	AAL20	Yes
computerId_02d	ERAM Computer Identification (Computer ID).	string	No	**"([0-9][A-HJ-NP-Z0-9]{2})|** **([0-9]{2}[A-HJ-NP-Z0-9])"** The element includes a digit, followed by two alphanumeric characters with the exception of the letters **I** and **O**, as specified by the pattern above.	**020**	No
sspId_167a	Site Specific Plan Identifier. It is assigned by IFPA to uniquely identify a flight plan in each ERAM facility.	string	No	**"\d{1,4}"** One to four digits.	**24**	No
mergedFPStatus_339a	This field contains the tentative flight plan merge status. The merge status must be one of the following: N - deletion without merge – the	string	No	**"[NSD]"** One of the letters **N**, **S**, or **D**.	**N** **S** **D**	Yes

Element Name [NL]	Element Definition	Type	Complex ?	Format/Permissible Values	Example	Required?
	tentative plan is deleted without merge S* - merge – an active plan is merged into the tentative flight plan; the flight has the same CID and Site Specific Plan Identifier as the tentative plan D* - merge – a proposed plan is activated and the tentative flight plan is merged into the activated plan; the flight has the CID and Site Specific Plan Identifier of the activated plan which are different from the tentative plan. * Note: For field value S, an FH is sent for the merged flight plan. For value D, an AH or DH message is sent for the activated flight plan.					
mergedFPComputerId_341a	This element specifies the merged flight plan computer ID.	string	No	**"\d[A-Z0-9][A-Z0-9]"** The format consists of one digit followed by two alphanumeric characters.	**9PP** **45A** **522**	No
mergedFPSspId_342a	This element contains the merged flight plan site-specific identifier. If the merge is of an active flight into the tentative flight, (*mergedFPStatus_339a*=S), the SSPID is the same as the tentative. If the merge is due to activation of a proposed flight plan, (*mergedFPStatus_339a*=D), the SSPID is that of the activated flight plan.	string	No	**"\d{1,4}"**	**25** **5289**	No

DRAFT

5.5.1.45 Tentative Flight Plan Removal [NL] - Diagram

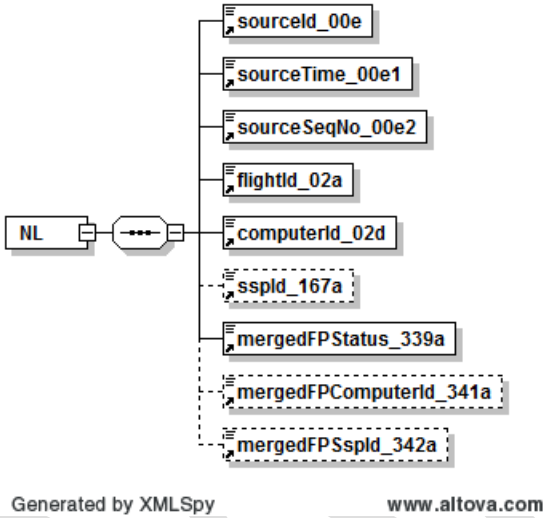

5.5.1.46 Tentative Flight Plan Removal Message in FIXM Format [NL_FIXM]

The following elements of the NL message in Simple XML format are not translated in the FIXM format of the message:

- sourceId_00e
- sourceTime_00e1
- sourceSeqNo_00e2
- mergedFPStatus_339a

Name [NL_FIXM]	Name [NL]	Definition	Type	Complex?	Format/Permissible Values	Example	Required?
flight/supplementalData/additionalFlightInformation/nameValue/@name flight/supplementalData/additio	FDPS_SequenceNo	Sequence number assigned by SFDPS to each message it receives from HADDS. The attribute *name* includes the	@name: @value: fb:FreeTextT	No	@name: ”MSG_SEQ_NO” @value:	@name="MSG_SEQ_NO" @value="6860416"	Yes

Name [NL_FIXM]	Name [NL]	Definition	Type	Complex?	Format/Permissible Values	Example	Required?
nalFlightInformation/nameValue/@value		constant string "MSG_SEQ_NO", and the attribute *value* contains the sequence number value.	ype		xs:nonNegativeInteger xs:maxInclusive value="999999999"		
flight/departure/@departurePoint	FDPS_Origin/departurePoint_26a	Attribute used to specify the first point or other initial entity where the air traffic control/management system route starts.	fb:FreeTextType	No	xs:string minLength=2, maxLength=12 **"([A-Z0-9]{2,5}) | ([A-Z0-9]{2,5}\d{6}) | (\d{4}[A-Z]?/\d{4,5}[A-Z]?)"** Any of the standard ways to represent a fix can be used for this element (fix name, lat/long, or fix-radial-distance), including the standard airport designators.	**AB** **DFW** **KDFW** **SHP090015** **ATOKA300040** **3500N/04000W**	No
flight/arrival/@arrivalPoint	FDPS_DestId/destination_27a	The final point or other final entity where the air traffic control/management system route terminates.	fb:FreeTextType	No	xs:string minLength=2, maxLength=12 **"([A-Z0-9]{2,5}) | ([A-Z0-9]{2,5}\d{6}) | (\d{4}[A-Z]?/\d{4,5}[A-Z]?)"** Any of the standard ways to represent a fix can be used for this element (fix name, lat/long, or fix-radial-distance), including the standard airport designators.	**AB** **DFW** **KDFW** **SHP090015** **ATOKA300040** **3500N/04000W**	No

DRAFT

Name [NL_FIXM]	Name [NL]	Definition	Type	Complex?	Format/Permissible Values	Example	Required?
flight/operator/operatingOrganization/organization/@name	FDPS_FlightOperator/OPRIndicator_918f	Attribute used to specify the full official name of the State, Organization, Authority, aircraft operating agency, handling agency engaged in or offering to engage in aircraft operation.	ff:TextNameType	No	xs:string	UAL	No
flight/@system	propSourceSystem	This attribute indicates which SFDPS system generated the message.	fb:ProvenanceSystemType	No	xs:string maxLength=128	FDPS1	Yes
flight/@timestamp	propRcvdTime	This attribute conatins the time at which the message was received by SFDPS.	ff:TimeType	No	xs:dateTime	2015-12-18T22:19:02.028Z	Yes
flight/@centre	center	This attribute specifies the code of the ARTCC (or FIR) that produced the data.	fb:ProvenanceCentreType	No	xs:string	ZAU	Yes
flight/arrival/runwayPositionAndTime/runwayTime/[estimated|actual]/@time	arrivalTime	This attribute specifies the proposed or the actual time of arrival at destination, set according to the flight state.	ff:TimeType	No	xs:dateTime	2014-06-20T20:17:52	Yes
flight/departure/runwayPositionAndTime/runwayTime/[actual|estimated]/@time	departureTime	This element specifies the proposed or actual departure time, set according to the flight state.	ff:TimeType	No	xs:dateTime	2014-06-20T20:17:52	Yes
flight/flightStatus/@fdpsFlightStatus	flightState	This attribute contains the current status of the flight as specified by SFDPS.	nas:SfdpsFlightStatusType	Yes	xs:string "PROPOSED|ACTIVE|COMPLETED|CANCELLED|DROPPED"	ACTIVE	Yes

DRAFT

Name [NL_FIXM]	Name [NL]	Definition	Type	Complex?	Format/Permissible Values	Example	Required?
flight/supplementalData/additionalFlightInformation/nameValue/@name flight/supplementalData/additionalFlightInformation/nameValue/@value	fdpsGufi	The name value pair specifies the SFDPS GUFI, an identifier on every message that positively identifies what flight the message is for.	fb:FreeTextType	No	xs:string @name: "FDPS_GUFI" @value: "us\.fdps\.\d{4}-\d{2}-\d{2}T\d{2}:\d{2}:\d{2}Z\.[A-Za-z0-9/]+"	name="FDPS_GUFI" value="us.fdps.2015-12-18T16:59:10Z.000/14/100"/>	Yes
flight/flightPlan/@identifier	eramGufi_316aFPId	This attribute specifies the unique flight plan identifier.	fb:FreeTextType	No	xs:string "[A-Z]{2}\d{5}[1-7]\d{2}"	"KU68378100"	No
flight/gufi	uuidGufi	This element contains a reference that uniquely identifies a flight and that is independent of any particular system. This reference conforms to the Universal Unique Identifier standard.	fb:GloballyFlightIdentifierType		xs:string "[0-9a-fA-F]{8}\-[0-9a-fA-F]{4}\-4[0-9a-fA-F]{3}\-[89aAbB][0-9a-fA-F]{3}\-[0-9a-fA-F]{12}"	4aaf92be-ac0a-4dba-998f-9e56f5d450b6	Yes
flight/flightIdentification/@aircraftIdentification	flightId_02a	Name used by Air Traffic Services units to identify and communicate with an aircraft.	fb:FlightIdentifierType	No	**"[A-Z0-9]{7}"**	**AAL20**	Yes
flight/supplementalData/additionalFlightInformation/nameValue/@name flight/supplementalData/additionalFlightInformation/nameValue/@value		The flight supplemental data is used to indicate that a flight message is a test message, by setting the attribute *name* to "**SIMULATED_FLIGHT**" and the attribute *value* to "**true**".	*@name:* *@value*: *fb:FreeTextType*	No	*@name:* **"[A-Z0-9_]{1,20}"** *@value:* **xs:string** **minLength=1, maxLength=100** @name = **"SIMULATED_FLIGHT"** @value = **"true"**	@name = **"SIMULATED_FLIGHT"** @value = **"true"**	No

DRAFT

Name [NL_FIXM]	Name [NL]	Definition	Type	Complex?	Format/Permissible Values	Example	Required?
flight/flightIdentification/@computerId	computerId_02d	A unique identification assigned by ERAM to each flight plan. This element specifies the computer ID (CID) of the tentative flight plan when the tentative flight plan is deleted without a merge, or when an active flight plan is merged into the tentative flight plan. The merged flight plan SSPID and CID and the tentative flight plan SSPID and CID are the same in the latter case and the element *flight/flightIdentificationPrevious* is not included in the message.	fb:FreeTextType	No	**"([0-9][A-HJ-NP-Z0-9]{2})|([0-9]{2}[A-HJ-NP-Z0-9])"** The element includes a digit, followed by two alphanumeric characters with the exception of the letters **I** and **O**, such as *ddd, ddL, dLd, dLL*.	**020**	No
flight/flightIdentificationPrevious/@computerId	computerId_02d	When the tentative flight plan merge consists in a proposed flight plan being activated and the tentative flight plan being merged into the activated flight plan, the flight has the CID of the activated plan which is different from the CID of the tentative flight plan. This attribute specifies the CID of the tentative flight plan, while the attribute flight/flightIdentification/@computerId specifies the merged flight plan computer ID.	fb:FreeTextType	No	**"([0-9][A-HJ-NP-Z0-9]{2})|([0-9]{2}[A-HJ-NP-Z0-9])"** The element includes a digit, followed by two alphanumeric characters with the exception of the letters **I** and **O**, such as *ddd, ddL, dLd, dLL*.	**020**	No
flight/flightIdentification/@siteSpecificPlanId	sspId_167a	Site Specific Plan Identifier (SSPID). It is assigned by Instrument Flight Procedures Automation (IFPA) to uniquely identify a flight plan in each ERAM facility. This element specifies the SSPID of the tentative flight plan when the tentative flight plan is deleted	fb:CountType	No	**"\d{1,4}"** One to four-digits.	**24**	No

Name [NL_FIXM]	Name [NL]	Definition	Type	Complex?	Format/Permissible Values	Example	Required?
		without a merge, or when an active flight plan is merged into the tentative flight plan. The merged flight plan SSPID and CID and the tentative flight plan SSPID and CID are the same in the latter case and the element *flight/flightIdentificationPrevious* is not included in the message.					
flight/flightIdentificationPrevious/@siteSpecificPlanId	sspId_167a	When the tentative flight plan merge consists in a proposed flight plan being activated and the tentative flight plan being merged into the activated flight plan, the flight has the SSPID of the activated plan which is different from the SSPID of the tentative flight plan. This attribute specifies the SSPID of the tentative flight plan, while the attribute *flight/flightIdentification/@siteSpecificPlanId* specifies the merged flight plan SSPID.	fb:CountType	No	**"\d{1,4}"** One to four-digits.	**24**	No
flight/flightIdentification/@computerId	mergedFPComputerId_341a	This element specifies the merged flight plan computer ID.	fb:FreeTextType	No	**"([0-9][A-HJ-NP-Z0-9]{2})|** **([0-9]{2}[A-HJ-NP-Z0-9])"** The element includes a digit, followed by two alphanumeric characters with the exception of the letters **I** and **O**, such as *ddd, ddL, dLd, dLL*.	**020**	No
flight/flightIdentification/@siteSpecificPlanId	mergedFPSspId_342a	This element contains the merged flight plan site-specific identifier. If the merge is of an	fb:CountType	No	**"\d{1,4}"** One to four-digits.	**25**	No

DRAFT

Name [NL_FIXM]	Name [NL]	Definition	Type	Complex?	Format/Permissible Values	Example	Required?
		active flight into the tentative flight, the SSPID is the same as the tentative. If the merge is due to activation of a proposed flight plan), the SSPID is that of the activated flight plan.					

5.5.1.47 Tentative Flight Plan Amendment Information [NU] – Data Elements

Element Name [NU]	Element Definition	Type	Complex?	Format/Permissible Values	Example	Required?
sourceId_00e	This element specifies the source identification that includes a UTC time followed by a four-digit sequence number.	string	No	**"\d{10}"** Ten digits, of which the first 6 digits represent the UTC time (*hhmmss*) and the last four digits, represent the message sequence number in the range [0000-9999].	**2359359001** where the first 6 digits are the UTC time (23:59:35 UTC) and the last 4 digits are sequence number of the message (9001).	Yes
sourceTime_00e1	This element specifies the time component of the previous element, sourceId_00e.	string	No	**"[0-2]\d_[0-5]\d_[0-5]\d"** Time in the format *hh_mm_ss,* where: *hh* stands for the 2-digit-hour in the range 00-23, *mm* stands for the 2-digit minutes in the range 00-59, and *ss* stands for the 2-digit seconds in the range 00-59.	**23_59_35** that represents 23:59:35 UTC	Yes
sourceSeqNo_00e2	This element specifies the message sequence number component of the sourceId_00e element.	string	No	**"\d{4}"** Four-digit number in the range [0000-9999].	**9001**	Yes
flightId_02a	Aircraft ID, or flight ID (also called Call Sign).	string	No	**"\+?[A-Z][A-Z0-9]{1,6}"** One uppercase alphabetic character followed by one to six alphanumeric	**AAL20**	Yes

Element Name [NU]	Element Definition	Type	Complex?	Format/Permissible Values	Example	Required?
				characters.		
computerId_02d	ERAM Computer Identification (Computer ID).	string	No	**"([0-9][A-HJ-NP-Z0-9]{2})|([0-9]{2}[A-HJ-NP-Z0-9])"** The element includes a digit, followed by two alphanumeric characters with the exception of the letters **I** and **O**, as specified by the pattern above.	**020**	No
sspId_167a	Site Specific Plan Identifier. It is assigned by IFPA to uniquely identify a flight plan in each ERAM facility.	string	No	**"\d{1,4}"** One to four digits.	**24**	No
numberOfAircraft_03a	This element includes the number of aircraft for the flight followed optionally by the Special Aircraft Indicator.	string	No	**"\d{0,2}[A-Z]?"** The element consists of zero to two digits optionally followed by one uppercase letter to represent the Special Aircraft Indicator. The indicator can also appear on its own (without the leading digits).	**3H** The number of aircraft is 3 and the special aircraft indicator is **H** for Heavy Jet.	No
typeOfAircraft_03c	Type of aircraft.	string	No	**"[A-Z][A-Z0-9]{1,3}"** The element consists of one letter followed by one to three alphanumeric characters.	**B747**	Yes
airborneEquip_03e	Airborne equipment qualifier. It consists of one alphanumeric character.	string	No	**"[A-Z]"** The element consists of one alphanumeric character, that can have one of the following values: **A** - Transponder with no Mode C **B** - Transponder with Mode C **E** – FMS with DME/DME and IRU position updating **G** – GNSS, including GPS or WAAS, with en-route and terminal capability **X** – No transponder **W** - RVSM	**E**	No
beaconCode_04a	Beacon code.	string	No	**"[0-7]{4}"**	Non-discrete VFR	No

DRAFT

Element Name [NU]	Element Definition	Type	Complex?	Format/Permissible Values	Example	Required?
				The element includes four octal digits (i.e. 0-7). When the last two digits of the four digits are zero, the beacon code is a non-discrete code. A discrete code is any code not ending in 00.	code: **2101**	
trueAirSpeed_05a	True airspeed expressed in knots.	string	No	**"\d{2,4}"** The format is two to four digits, in the range 01 – 3700 knots. Aircraft speed is required to be specified by using one of the three possible elements: trueAirSpeed_05a, machSpeed_05c or classifiedSpeed_05d.	**540** Aircraft true airspeed is 540 knots.	Yes, if neither machSpeed_05c nor classifiedSpeed_05d are included in the message.
machSpeed_05c	Mach speed.	string	No	**"M\d{3}"** The letter **M** followed by three digits. The maximum value is M500.	The speed 0.85 Mach is represented as **M085**.	Yes, if neither trueAirSpeed_05a nor classifiedSpeed_05d are included in the message.
classifiedSpeed_05d	Adapted classified speed. It is not printed on flight strips.	string	No	**"SC"**	This element may only include the string character **SC**.	Yes, if neither trueAirSpeed_05a nor machSpeed_05c are included in the message.
assignedAlt_08a	Assigned altitude or flight level expressed in hundreds of feet. Only one of the altitude elements assignedAlt_08a, assignedAlt_08b, assignedAlt_08c, assignedAlt_08d, assignedAlt_08e, assignedAlt_08f, assignedAlt_08g, assignedAlt_08h may be included in the message.	string	No	**"(\d{2,3}) | VFR"** The format consists of either two to three digits, or the constant string **VFR**. Three digits are required for ARTS III, thus a leading zero needs to be used when necessary.	Assigned altitude of 34,000 feet: **340** Assigned altitude 9,000 feet ARTS III: **090**	No

DRAFT

Element Name [NU]	Element Definition	Type	Complex?	Format/Permissible Values	Example	Required?
assignedAlt_08b	Fixed value of **OTP** which indicates VFR-ON-Top. It specifies that the aircraft is flying above the clouds in VFR conditions. It may only be specified if none of the other assignedAtl_08 elements is included in the message.	string	No	**"OTP"**	Fixed value of **OTP.**	No
assignedAlt_08c	VFR-ON-Top with altitude. It represents an IFR flight operating above the clouds in VFR conditions at the specified assigned altitude. It may only be specified if none of the other assignedAtl_08 elements is included in the message.	string	No	"**OTP/\d{2,3}**" The format is the constant string **OTP/** followed by two to three digits that represent the assigned altitude in hundreds of feet.	Aircraft flying VFR-ON-Top at 25,000 feet: **OTP/250**	No
assignedAlt_08d	The assigned block of altitudes for the flight to fly at. It may only be specified if none of the other assignedAtl_08 elements is included in the message.	string	No	**"\d{2,3}B\d{2,3}"** The format is two to three digits, followed by the letter **B**, followed by two to three digits. The leading and trailing two to three digits define the block of altitudes in hundreds of feet for the flight to fly at. The lowest altitude must be listed first.	Assigned altitude block of 8,000 feet to 14,000 feet: **80B140**	No
assignedAlt_08e	Element used for IFR flights operating above a specified altitude. It may only be specified if none of the other assignedAtl_08 elements is included in the message.	string	No	**"ABV/\d{2,3}"** The format consists of the string **ABV/** followed by two to three digits that represent the altitude in hundreds of feet above which the flight is flying.	Aircraft is flying above 60,000 feet. **ABV/600**	No
assignedAlt_08f	Assigned Altitude/FIX/Altitude element specifies the altitudes to and from a fix for the flight	string	No	**"(\d{2,3}/[A-Z0-9]{2,5}/\d{2,3})| (\d{2,3}/[A-Z0-9]{2,5}\d{6}/\d{2,3}) | (\d{2,3}/\d{4}[A-Z]?/\d{4,5}[A-**	**240/DAL350010/220** Flight flies at altitude 24,000 feet to the fix	No

DRAFT

Element Name [NU]	Element Definition	Type	Complex?	Format/Permissible Values	Example	Required?
	to fly at. It may only be specified if none of the other assignedAtl_08 elements is included in the message.			**Z]?/\d{2,3})"** The altitudes are specified in hundreds of feet in a two to three digit format. The fix is specified using the same format as the coordination fix element "coordFix_06a". The fix cannot be the departure or arrival point.	radial distance fix and then descend to altitude 22,000 feet.	
assignedAlt_08g	It is used to specify that the flight is flying Visual Flight Rules (VFR). It can only have the value **VFR**. It may only be specified if none of the other assignedAtl_08 elements is included in the message.	string	No	**"VFR"**	The string **VFR.**	No
assignedAlt_08h	It is used to specify that the flight is flying VFR at a specified altitude. It may only be specified if none of the other assignedAtl_08 elements is included in the message.	string	No	**"VFR/\d{2,3}"** The format consists of the string **VFR/** followed by two to three digits that represent an altitude in hundreds of feet.	**VFR/75** The aircraft is flying VFR at 7,500 feet.	No
reportedAlt_54a	The element is used to specify the reported altitude. For aircraft with operative Mode C capability, this element contains the Mode C altitude. For aircraft without Mode C capability or with non-operative Mode C capability, this element may contain the controller reported altitude. If there is no Mode C or controller reported altitude, or the reported altitude is negative, this element contains	string	No	**"\d{1,3}"** The format consists of one to three digits that represent the reported aircraft altitude in hundreds of feet. Leading zeros may be inserted for altitudes of less than 3 digits.	**310** The aircraft reported altitude is 31,000 feet.	No

DRAFT

Element Name [NU]	Element Definition	Type	Complex?	Format/Permissible Values	Example	Required?
	“0” or "000" or is optional.					
reportedAlt_54b	This field is the reported altitude B4 indicator. The ERAM controllers’ full data block used for tracking an aircraft has a special indicator for the B4 character of the full data block.	string	No	**“[ABCFNTVX^v+-/]”** The format of this element is one character as follows: A - Reported altitude (controller entered) equals single assigned altitude. B - Beacon reported altitude is in conformance or controller entered reported altitude is in the block for an aircraft which has been assigned an altitude block (B1 to B3 - low altitude limit of block and C1 to C3=high altitude limit of block). C - Beacon reported altitude is within Altitude Conformance Limits feet. F - Reported altitude (controller entered) equals first altitude or (beacon reported) is within Altitude Conformance Limits of first altitude when assigned altitude is (d)dd/fix/(d)dd and the first altitude is displayed in Field B. N - No beacon reported altitude has been received for the aircraft; no controller entered reported altitude exists for the aircraft; or the aircraft’s rate of change is questionable and Computed Rate of Change is being used to make further conformance checks. T - Interim altitude is currently being displayed in the assigned altitude field (B1 through B3). V - Beacon reported or controller entered reported altitude, when no assigned altitude exists for the aircraft. X - Beacon reported altitude becomes disestablished. (C1-C3 also contains `X' character.)	**B**	No

DRAFT

Element Name [NU]	Element Definition	Type	Complex?	Format/Permissible Values	Example	Required?
				^ - Beacon reported or controller entered reported altitude is below assigned altitude when flight is climbing v - Beacon reported or controller entered reported altitude is above assigned altitude when flight is descending + - Beacon reported altitude exceeds upper conformance limit for an aircraft which has reached it assigned altitude or the controller entered reported altitude exceeds the assigned altitude for a non-Mode C aircraft which has previously been reported at the assigned altitude. - - Beacon reported altitude is less than lower conformance limit for an aircraft which has reached its assigned altitude or the controller entered reported altitude is less than the assigned altitude for a non-Mode C aircraft which has previously been reported at the assigned altitude. / - Flight type is `OTP' or `VFR’		
reportedAlt_54c	The element specifies the reported altitude C4 indicator. The ERAM controllers full data block used for tracking an aircraft has a special indicator for the C4 character of the full data block as follows: If the aircraft is not responding with the Mode C altitude, the controller entered reported altitude is displayed in *reportedAlt_54c* with a pound sign (#) or X in position C4	string	No	**“[#X]”**	**#**	No

DRAFT

Element Name [NU]	Element Definition	Type	Complex?	Format/Permissible Values	Example	Required?
	whenever (1) the controller entered reported altitude does not equal the assigned altitude or is not within the assigned altitude block, (2) no assigned altitude has been entered, or (3) the assigned altitude is VFR, VFR/(d)dd, OTP, or OTP/(d)dd. In either case for a Mode C reported altitude or a controller reported altitude, when an interim altitude is displayed in *reportedAlt_54b* the B4 character position contains the letter "T" and the reported altitude, or either the lower or upper altitude of an assigned block altitude is displayed in *reportedAlt_54c*. In the case where a controller entered reported altitude exists, a pound sign (#) or X is displayed in the C4 position.					
interimAlt_76b	This element specifies the interim altitude for the flight in hundreds of feet. It is included in the message if an interim altitude is assigned.	string	No	**"\d{1,3}"**	**240**	No

DRAFT

5.5.1.48 Tentative Flight Plan Amendment Information [NU] - Diagram

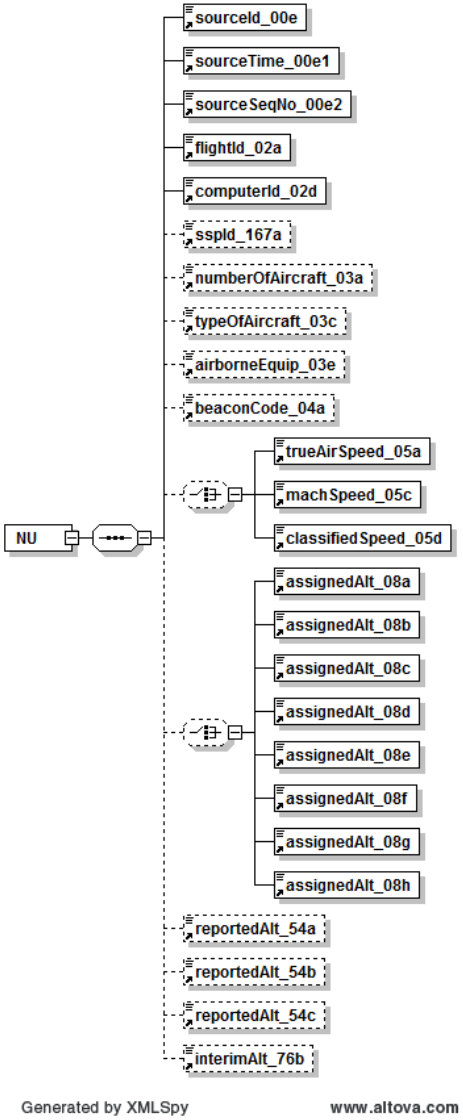

5.5.1.49 Tentative Flight Plan Amendment Information Message in FIXM Format [NU_FIXM] – Data Elements

The following elements of the NU message in Simple XML format are not translated in the FIXM format of the message:

- sourceId_00e
- sourceTime_00e1
- sourceSeqNo_00e2
- reportedAlt_54b
- reportedAlt_54c

Name [NU_FIXM]	Name [NU]	Definition	Type	Complex?	Format/Permissible Values	Example	Required?
flight/supplementalData/additionalFlightInformation/nameValue/@name flight/supplementalData/additionalFlightInformation/nameValue/@value	FDPS_SequenceNo	Sequence number assigned by SFDPS to each message it receives from HADDS. The attribute *name* includes the constant string "MSG_SEQ_NO", and the attribute *value* contains the sequence number value.	@name: @value: fb:FreeTextType	No	@name: "MSG_SEQ_NO" @value: xs:nonNegativeInteger xs:maxInclusive value="999999999"	@name="MSG_SEQ_NO" @value="6860416"	Yes
flight/departure/@departurePoint	FDPS_Origin/departurePoint_26a	Attribute used to specify the first point or other initial entity where the air traffic control/management system route starts.	fb:FreeTextType	No	xs:string minLength=2, maxLength=12 **"([A-Z0-9]{2,5}) |** **([A-Z0-9]{2,5}\d{6}) |** **(\d{4}[A-Z]?/\d{4,5}[A-Z]?)"** Any of the standard ways to represent a fix can be used for this element (fix name, lat/long, or fix-radial-distance), including the standard airport designators.	**AB** **DFW** **KDFW** **SHP090015** **ATOKA300040** **3500N/04000W**	No
flight/arrival/@arrivalPoint	FDPS_DestId/de	The final point or other final entity where the air traffic	fb:FreeTextType	No	xs:string minLength=2, maxLength=12	**AB** **DFW**	No

Name [NU_FIXM]	Name [NU]	Definition	Type	Complex?	Format/Permissible Values	Example	Required?
	stination_27a	control/management system route terminates.			**"([A-Z0-9]{2,5}) | ([A-Z0-9]{2,5}\d{6}) | (\d{4}[A-Z]?/\d{4,5}[A-Z]?)"** Any of the standard ways to represent a fix can be used for this element (fix name, lat/long, or fix-radial-distance), including the standard airport designators.	**KDFW SHP090015 ATOKA300040 3500N/04000W**	
flight/operator/operatingOrganization/organization/@name	FDPS_FlightOperator/OPRIndicator_918f	Attribute used to specify the full official name of the State, Organization, Authority, aircraft operating agency, handling agency engaged in or offering to engage in aircraft operation.	ff:TextNameType	No	xs:string	UAL	No
flight/@system	propSourceSystem	This attribute indicates which SFDPS system generated the message.	fb:ProvenanceSystemType	No	xs:string maxLength=128	FDPS1	Yes
flight/@timestamp	propRcvdTime	This attribute conatins the time at which the message was received by SFDPS.	ff:TimeType	No	xs:dateTime	2015-12-18T22:19:02.028Z	Yes
flight/@centre	center	This attribute specifies the code of the ARTCC (or FIR) that produced the data.	fb:ProvenanceCentreType	No	xs:string	ZAU	Yes
flight/arrival/runwayPositionAndTime/runwayTime/estimated/@time	arrivalTime	This attribute specifies the proposed or the actual time of arrival at destination, set according to the flight state.	ff:TimeType	No	xs:dateTime	2014-06-20T20:17:52	Yes
flight/departure/runwayPositionAndTime/runwayTime/[actual|estimated]/@time	departureTime	This element specifies the proposed or actual departure time, set according to the flight state.	ff:TimeType	No	xs:dateTime	2014-06-20T20:17:52	Yes
flight/flightStatus/@fdpsFlightStatus	flightState	This attribute contains the current status of the flight as specified by SFDPS.	nas:SfdpsFlightStatusType	Yes	xs:string "PROPOSED|ACTIVE|COMPLETED|CANCELLED|DROP	ACTIVE	Yes

DRAFT

Name [NU_FIXM]	Name [NU]	Definition	Type	Complex?	Format/Permissible Values	Example	Required?
					PED”		
flight/supplementalData/additionalFlightInformation/nameValue/@name flight/supplementalData/additionalFlightInformation/nameValue/@value	fdpsGufi	The name value pair specifies the SFDPS GUFI, an identifier on every message that positively identifies what flight the message is for.	fb:FreeTextType	No	xs:string @name: "FDPS_GUFI" @value: "us\.fdps\.\d{4}-\d{2}-\d{2}T\d{2}:\d{2}:\d{2}Z\.[A-Za-z0-9/]+"	name="FDPS_GUFI" value="us.fdps.2015-12-18T16:59:10Z.000/14/100"/>	Yes
flight/flightPlan/@identifier	eramGufi_316aFPId	This attribute specifies the unique flight plan identifier.	fb:FreeTextType	No	xs:string "[A-Z]{2}\d{5}[1-7]\d{2}"	"KU68378100"	No
flight/gufi	uuidGufi	This element contains a reference that uniquely identifies a flight and that is independent of any particular system. This reference conforms to the Universal Unique Identifier standard.	fb:GloballyFlightIdentifierType		xs:string "[0-9a-fA-F]{8}\-[0-9a-fA-F]{4}\-4[0-9a-fA-F]{3}\-[89aAbB][0-9a-fA-F]{3}\-[0-9a-fA-F]{12}"	4aaf92be-ac0a-4dba-998f-9e56f5d450b6	Yes
flight/flightIdentification/@aircraftIdentification	flightId_02a	Name used by Air Traffic Services units to identify and communicate with an aircraft.	fb:FlightIdentifierType	No	**"[A-Z0-9]{7}"**	**AAL20**	Yes
flight/supplementalData/additionalFlightInformation/nameValue/@name flight/supplementalData/additionalFlightInformation/nameValue/@value		The flight supplemental data is used to indicate that a flight message is a test message, by setting the attribute *name* to “**SIMULATED_FLIGHT**” and the attribute *value* to “**true**”.	*@name:* *@value*: *fb:FreeTextType*	No	*@name:* **“[A-Z0-9_]{1,20}”** *@value:* **xs:string** **minLength=1, maxLength=100** @name = **“SIMULATED_FLIGHT”** @value = **“true”**	@name = **“SIMULATED_FLIGHT”** @value = **“true”**	No
flight/flightIdentification/@computerId	computerId_02	A unique identification assigned by ERAM to each	fb:FreeTextType	No	**"([0-9][A-HJ-NP-Z0-9]{2})|**	**020**	No

DRAFT

Name [NU_FIXM]	Name [NU]	Definition	Type	Complex?	Format/Permissible Values	Example	Required?
	d	flight plan.			**([0-9]{2}[A-HJ-NP-Z0-9])"** The element includes a digit, followed by two alphanumeric characters with the exception of the letters **I** and **O**, such as *ddd, ddL, dLd, dLL*.		
flight/flightIdentification/@siteSpecificPlanId	sspId_167a	Site Specific Plan Identifier. It is assigned by Instrument Flight Procedures Automation (IFPA) to uniquely identify a flight plan in each ERAM facility.	fb:CountType	No	**"\d{1,4}"** One to four-digits.	**24**	No
flight/aircraftDescription/@aircraftQuantity	numberOfAircraft_03a	This element includes the number of aircraft for the flight.	fb:countType	No	**"\d{0,2}"** The element consists of zero to two digits.	**3**	No
flight/aircraftDescription/@tfmsSpecialAircraftQualifier	numberOfAircraft_03a-SpecialAircraftIndicator	This element includes the Special Aircraft Indicator. It indicates the flight is a heavy jet, B757 or, if not present, a large jet and if the flight is either equipped or not with TCAS. This indicator is used for output purposes such as strip printing and message transfers to other facilities such as Automated Radar Terminal System (ARTS). NOTE TFMS Special Aircraft Qualifier is a bad fit to Special Aircraft Indicator but no other fields seem to fit.	nas:NasSpecialAircraftQualifierType	No	**"HEAVY_JET|TCAS|B757|HEAVY_JET_AND_TCAS"** **"HEAVY_JET"** = Capable of takeoff weights of 300,000 pounds or more **"TCAS"** = Traffic collision avoidance system or traffic alert and collision avoidance system **"B757"** = Controllers are required to apply the special wake turbulence separation criteria for the Boeing 757. **"HEAVY_JET_AND_TCAS"** = Capable of takeoff weights of 300,000 pounds or more and traffic collision avoidance system.	**HEAVY_JET**	No
flight/aircraftDescription/aircraftType/icaoModelIdentifier	typeOfAircraft_03c	The ICAO code of the aircraft type.	fb:IcaoAircraftIdentifierType	No	**"[A-Z][A-Z0-9]{1,3}"** The element consists of one letter followed by one to three alphanumeric characters.	**B747**	Yes

DRAFT

Name [NU_FIXM]	Name [NU]	Definition	Type	Complex?	Format/Permissible Values	Example	Required?
flight/aircraftDescription/@equipmentQualifier	airborneEquip_03e	Airborne equipment qualifier. A value assigned to the aircraft, based on its navigational equipment, whether or not it has a transponder, and if it has a transponder, whether the transponder supports Mode C.	nas:NasAirborneEquipmentQualifierType	No	**" [ABCDGHILMNPSTUVWXYZ]"** The element consists of one alphanumeric character, that can have one of the following values: • "X"= No RVSM, No DME, No transponder • "T"= No RVSM, No DME, Transponder with no mode C • "U"= No RVSM, No DME: Transponder with mode C • "D"= DME: No transponder • "B"= DME: Transponder with no mode C • "A"= DME: Transponder with mode • "M"= TACAN ONLY: No transponder • "N"= TACAN ONLY: Transponder with no mode C • "P"= TACAN ONLY: Transponder with mode C • "C"= "Y"= LORAN,VORDME,INS,RNAV: No transponder • "I"= LORAN,VORDME,INSRNAV: Transponder with mode C • "H"= RVSM, Failed transponder or Failed Mode C capability • "S=ADVANCED RNAV, TRANSPONDER, MODE C: FMS with DMEDME position updating • "G"= ADVANCED RNAV, TRANSPONDER, MODE C: Global Navigation Satellite System (GNSS), including GPS or Wide Area Augmentation System (WAAS), with enroute and terminal capability • "V"= ADVANCED RNAV, TRANSPONDER, MODE C: Required Navigational Performance (RNP). The aircraft meets the RNP type prescribed for the route segments, routes and/or area concerned. • "Z"= REDUCED VERTICAL SEPARATION	**E**	No

DRAFT

Name [NU_FIXM]	Name [NU]	Definition	Type	Complex?	Format/Permissible Values	Example	Required?
					• MINIMUM (RVSM): E with RVSM • "L"= REDUCED VERTICAL \ SEPARATION MINIMUM (RVSM): G with RVSM "W"= REDUCED VERTICAL SEPARATION MINIMUM (RVSM): RVSM		
flight/enRoute/beaconCodeAssignment/currentBeaconCode	beaconCode_04a	Current assigned beacon code.	fb:BeaconCodeType	No	"[0-7]{4}" The element includes four octal digits (i.e. 0-7). When the last two digits of the four-digits are zero, the beacon code is a non-discrete code. A discrete code is any code not ending in 00	Non-discrete VFR code: **2101**	No
flight/requestedAirspeed/nasAirspeed flight/requestedAirspeed/@uom	trueAirSpeed_05a machSpeed_05c	The aircraft speed expressed in either true airspeed or mach. The attribute uom contains the unit of measure.	ff: TrueAirSpeedOrMachType uom: ff:AirspeedMeasureType	No	**"xs:double"** uom: **"KILOMETERS_PER_HOUR|KNOTS|MACH"** This element is required if requestedAirspeed/classifed is not included in the message.	**540** @uom=**KNOTS**	No uom: Yes
flight/requestedAirspeed/classified	classifiedSpeed_05d	Classified Speed Indicator. It indicates that the speed for this flight is classified and is not to be recorded.	nas:ClassifiedSpeedIndicatorType	No	**"CLASSIFIED"** This element is required if requestedAirspeed/nasAirspeed is not included in the message.	**CLASSIFIED**	No
flight/assignedAltitude/simple flight/assignedAltitude/simple/@uom	assignedAlt_08a	Simple altitude: single measurement above reference point. It represents the only NAS altitude that maps directly to the core ICAO altitude types. Only one of the altitude elements *simple*, *vfrOnTop*, *vfrOnTopPlus*, *block*, *above*, *altFixAlt*, *vfr*, *vfrPlus* may be included in the message. The attribute *uom* contains the unit of measure for the element	nas:SimpleAltitudeType uom: ff:AltitudeMeasureType	Yes	**"xs:double"** uom: "**FEET|METERS**"	Assigned altitude of 34,000 feet: **34000** @uom = **FEET**	No uom: Yes

DRAFT

Name [NU_FIXM]	Name [NU]	Definition	Type	Complex?	Format/Permissible Values	Example	Required?
		assignedAltitude/simple.					
flight/assignedAltitude/vfrOnTop	assignedAlt_08b	The presence of this element indicates VFR-ON-Top. It specifies that the aircraft is flying above the clouds in VFR conditions. Only one of the altitude elements *simple*, *vfrOnTop*, *vfrOnTopPlus*, *block*, *above*, *altFixAlt*, *vfr*, *vfrPlus* may be included in the message.	Nas:VfrOnTopAltitudeType	Yes	Empty element.		No
flight/assignedAltitude/vfrOnTopPlus flight/assignedAltitude/vfrOnTopPlus/@uom	assignedAlt_08c	VFR-ON-Top with altitude. It represents an Instrument Flight Rules (IFR) flight operating above the clouds in VFR conditions at the specified assigned altitude. Only one of the altitude elements *simple*, *vfrOnTop*, *vfrOnTopPlus*, *block*, *above*, *altFixAlt*, *vfr*, *vfrPlus* may be included in the message. The attribute *uom* specifies the unit of measure for the *vfrOnTopPlus* element.	nas:VfrOnTopPlusAltitudeType uom: ff:AltitudeMeasureType	No	**"xs:double"** uom: "**FEET|METERS**"	Aircraft flying VFR-ON-Top at 25,000 feet: **25000** @uom = **FEET**	No uom: Yes
flight/assignedAltitude/block/above flight/assignedAltitude/block/above/@uom	assignedAlt_08d	The bottom level of the assigned block of altitudes for the flight to fly at. Only one of the altitude elements *simple*, *vfrOnTop*, *vfrOnTopPlus*, *block*, *above*, *altFixAlt*, *vfr*, *vfrPlus* may be included in the message. The attribute *uom* specifies the unit of measure for the *assignedAltitude/block/above*	ff:AltitudeType uom: ff:AltitudeMeasureType	Yes	**"xs:double"** uom: "**FEET|METERS**"	*above:* **8000** @uom = **FEET**	No uom: Yes

DRAFT

Name [NU_FIXM]	Name [NU]	Definition	Type	Complex?	Format/Permissible Values	Example	Required?
		element.					
flight/assignedAltitude/block/below flight/assignedAltitude/block/below/@uom	assignedAlt_08d	The top level of the assigned block of altitudes for the flight to fly at. Only one of the altitude elements *simple*, *vfrOnTop*, *vfrOnTopPlus*, *block*, *above*, *altFixAlt*, *vfr*, *vfrPlus* may be included in the message. The attribute *uom* specifies the unit of measure for the *assignedAltitude/block/below* element.	ff:AltitudeType uom: ff:AltitudeMeasureType	Yes	**"xs:double"** uom: **"FEET|METRES"**	*below:* **14000** @uom = **FEET**	No uom: Yes
flight/assignedAltitude/above flight/assignedAltitude/above/@uom	assignedAlt_08e	Element used for IFR flights operating above a specified altitude. Only one of the altitude elements *simple*, *vfrOnTop*, *vfrOnTopPlus*, *block*, *above*, *altFixAlt*, *vfr*, *vfrPlus* may be included in the message. The attribute *uom* specifies the unit of measure for the *assignedAltitude/above* element.	nas:AboveAltitudeType uom: ff:AltitudeMeasureType	Yes	**"xs:double"** uom: **"FEET|METRES"**	Aircraft is flying above 60,000 feet: **60000** @uom = **FEET**	No uom: Yes
flight/assignedAltitude/altFixAlt/point	assignedAlt_08f	The element *assignedAltitude/altFixAlt* is defined as an altitude prior to a specified fix, the specified fix itself, and altitude post specified fix. The element *altFixAlt/point* defines the specified fix associated with the altitude. The fix cannot be the departure or arrival point.	fb:SignificantPointType (abstract type) *fb:FixPointType/* *ff:GeographicalLocationType/* *fb:RelativePointType*	Yes	- *fb:FixPointType* **"[A-Z0-9]{2,5}"** - *ff:GeographicalLocationType* List of two **xs:double** (latitude followed by longitude) - *fb:RelativePointType* - fix: **"[A-Z0-9]{2,5}"** - distance: *ff:DistanceType* **xs:double** - radial:	**MDG**	No

Name [NU_FIXM]	Name [NU]	Definition	Type	Complex?	Format/Permissible Values	Example	Required?
		Only one of the altitude elements *simple*, *vfrOnTop*, *vfrOnTopPlus*, *block*, *above*, *altFixAlt*, *vfr*, *vfrPlus* may be included in the message.			*fb:DirectionType* **xs:double** minInclusive = 0 maxInclusive =360		
flight/assignedAltitude/altFixAlt/pre flight/assignedAltitude/altFixAlt/pre/@uom	assignedAlt_08f	The element *assignedAltitude/altFixAlt* is defined as an altitude prior to a specified fix, the specified fix itself, and altitude post specified fix. The element *altFixAlt/pre* defines the altitude before the specified fix. Only one of the altitude elements *simple*, *vfrOnTop*, *vfrOnTopPlus*, *block*, *above*, *altFixAlt*, *vfr*, *vfrPlus* may be included in the message. The attribute *uom* specifies the unit of measure for the *assignedAltitude/above* element.	ff:AltitudeType uom: ff:AltitudeMeasureType	Yes	**"xs:double"** uom: **"FEET|METRES"**	**240000** @uom = **FEET**	No. uom: Yes
flight/assignedAltitude/altFixAlt/post flight/assignedAltitude/altFixAlt/post/@uom	assignedAlt_08f	The element *assignedAltitude/altFixAlt* is defined as an altitude prior to a specified fix, the specified fix itself, and altitude post specified fix. The element *altFixAlt/pre* defines the altitude after the specified fix. Only one of the altitude elements *simple*, *vfrOnTop*,	ff:AltitudeType uom: ff:AltitudeMeasureType	Yes	**"xs:double"** uom: **"FEET|METRES"**	**22000** @uom = **FEET**	No. uom: Yes

DRAFT

Name [NU_FIXM]	Name [NU]	Definition	Type	Complex?	Format/Permissible Values	Example	Required?
		vfrOnTopPlus, *block*, *above*, *altFixAlt*, *vfr*, *vfrPlus* may be included in the message. The attribute *uom* specifies the unit of measure for the *altFixAlt/post* element.					
flight/assignedAltitude/vfr	assignedAlt_08g	The presence of this element in the message specifies that the flight is flying Visual Flight Rules (VFR). Only one of the altitude elements *simple*, *vfrOnTop*, *vfrOnTopPlus*, *block*, *above*, *altFixAlt*, *vfr*, *vfrPlus* may be included in the message.	nas:VfrAltitudeType	Yes	**Empty element**		No
flight/assignedAltitude/vfrPlus flight/assignedAltitude/vfrPlus/@uom	assignedAlt_08h	It is used to specify that the flight is flying VFR at a specified altitude. Only one of the altitude elements *simple*, *vfrOnTop*, *vfrOnTopPlus*, *block*, *above*, *altFixAlt*, *vfr*, *vfrPlus* may be included in the message. The attribute *uom* specifies the unit of measure for the *assignedAltitude*/vfrPlus element.	nas:VfrPlusAltitudeType uom: ff:AltitudeMeasureType	Yes	**"xs:double"** uom: **"FEET|METRES"**	The aircraft is flying VFR at 7,500 feet: **7500** @uom = **FEET**	No uom: Yes
flight/enRoute/position/altitude flight/enRoute/position/altitude/@uom	reportedAlt_54a	The element is used to specify the reported altitude. For aircraft with operative Mode C capability, this element contains the Mode C altitude. For aircraft without Mode C capability or with non-operative Mode C capability, this element may	ff:AltitudeType uom: ff:AltitudeMeasureType	Yes	**xs:double** uom: **"FEET|METRES"**	**31000** @uom = **FEET** The aircraft reported altitude is 31,000 feet.	No uom: Yes

DRAFT

Name [NU_FIXM]	Name [NU]	Definition	Type	Complex?	Format/Permissible Values	Example	Required?
		contain the controller reported altitude. The attribute *uom* specifies the unit of measure for the *altitude* element.					
flight/interimAltitude flight/interimAltitude/@uom	interimAlt_76b	This element specifies the interim altitude the flight is cleared to maintain different from that in the flight plan. The attribute *uom* specifies the unit of measure for the *interimAltitude* element: FEET/METRES.	nas:SimpleAltitudeType uom: ff:AltitudeMeasureType	Yes	xs:double uom: **"FEET|METRES"**	**240000** @uom = **FEET**	No

DRAFT

5.5.1.50 Batch Track Information [BATCH_TH] – Data Elements

Element Name [BATCH_TH]	Element Definition	Type	Complex?	Format/Permissible Values	Example	Required?
numberOfMsgs	This element specifies the number of individual Track Information messages (TH) contained in the message.	int	No		**7**	Yes
singleTH/THmetadata/propFlightId	This element specifies the flight identification (aircraft id, call sign) of the flight to which the message pertains.It represents a property of the individual TH message within the BATCH_TH message.	string	No	**"\+?[A-Z][A-Z0-9]{1,6}"** One uppercase alphabetic character followed by one to six alphanumeric characters.	**AAL20**	No
singleTH/THmetadata/propFlightOperator	This element specifies the Aircraft Operator, if not obvious from the aircraft identification in propFlightId. It represents a property of the individual TH message within the BATCH_TH message.	string	No	Free-form string of up to 3000 characters.	**UAL**	No
singleTH/THmetadata/propOrigin	This element specifies the origin of the flight to which the message pertains. It represents a property of the individual TH message within the BATCH_TH message.	string	No	**"([A-Z0-9]{2,5}) | ([A-Z0-9]{2,5}\d{6}) | (\d{4}[A-Z]?/\d{4,5}[A-Z]?)"** Any of the standard ways to represent a fix can be used for this element (fix name, lat/long, or fix-radial-distance), including the standard airport designators.	**AB** **DFW** **KDFW** **SHP090015** **ATOKA300040** **3500N/04000W**	No
singleTH/THmetadata/propDestination	This element specifies the destination of the flight to which the message pertains. It represents a property of the individual TH message within the BATCH_TH message.	string	No	**"([A-Z0-9]{2,5}) | ([A-Z0-9]{2,5}\d{6}) | (\d{4}[A-Z]?/\d{4,5}[A-Z]?)"** Any of the standard ways to represent a fix can be used for this element (fix name, lat/long, or fix-radial-distance), including the standard airport	**AB** **DFW** **KDFW** **SHP090015** **ATOKA300040** **3500N/04000W**	No

DRAFT

				designators.		
singleTH/THmetadata/ propRcvdTime	This element specifies the time at which the message was received by SFDPS, in XML dateTime format. It represents a property of the individual TH message within the BATCH_TH message.	xs:dateTime	No		**2016-01-06T17:59:57.630Z**	Yes
singleTH/THmetadata/ propRcvdTimeEpoch	This element specifies the time at which the message was received by SFDPS, in the form of number of seconds since January 1, 1970. It represents a property of the individual TH message within the BATCH_TH message.	xs:double	No		**1452103197.630377**	Yes
singleTH/THmetadata/ propSentTime	This element specifies the time at which the message was sent from SFDPS to NEMS, in XML dateTime format. It represents a property of the individual TH message within the BATCH_TH message.	xs:dateTime	No		**2016-01-06T18:00:00.789Z**	Yes
singleTH/THmetadata/ propSentTimeEpoch	This element specifies the time at which the message was sent from SFDPS to NEMS, in the form of number of seconds since January 1, 1970. It represents a property of the individual TH message within the BATCH_TH message.	xs:double	No		**1452103200.789000**	Yes
singleTH/THmetadata/ propSeqNo	This element specifies the messages sequence number. It represents a property of the individual TH message within the BATCH_TH message. It represents a property of the individual TH message within the BATCH_TH message.	string	No	xs:nonNegativeInteger xs:maxInclusive value="999999999"		No
singleTH/THmetadata/ propTestMsg	This element represents a property of the individual TH message within the BATCH_TH message.	boolean	No		**false**	No
singleTH/THmetadata/	This element specifies Allows Track	boolean	No		**true**	No

DRAFT

singleTH/THmetadata/propOneMinFreq	(TH) messages to be distributed to a client at one-minute intervals, rather than at their actual frequency, which is twelve seconds. This property should be set on every fifth TH message.					
singleTH/THmetadata/msgTimes/arrivalTime	This element specifies the arrival time of the flight, in XML dateTime format. It represents a property of the individual TH message within the BATCH_TH message.	dateTime	No		**2015-12-30T19:21:00Z**	No
singleTH/THmetadata/msgTimes/arrivalTimeEpoch	This element specifies the arrival time of the flight, in the form of number of seconds since January 1, 1970. It represents a property of the individual TH message within the BATCH_TH message.	long	No		**1451503260000**	No
singleTH/THmetadata/msgTimes/departureTime	This element specifies the departure time of the flight, in XML dateTime format. It represents a property of the individual TH message within the BATCH_TH message.	dateTime	No		**2015-12-30T17:31:00Z**	No
singleTH/THmetadata/msgTimes/departureTimeEpoch	This element specifies the departure time of the flight, in the form of number of seconds since January 1, 1970. It represents a property of the individual TH message within the BATCH_TH message.	long	No		**1451496660000**	No
singleTH/THmetadata/flightState	This element contains the current status of the flight as specified by SFDPS.	string	No	**"Proposed|Active|Landed|Cancelled|Dropped"**	**"Proposed"**	No
singleTH/THmetadata/flightStateActiveOrProposed	This element specifies whether the current status of the flight as specified by SFDPS is active or proposed.	boolean	No	**"true|false"** **Default: "true"**	**"true"**	No
singleTH/THmetadata/fdpsGufi	The SFDPS GUFI is an identifier on every message that positively identifies what flight the message is for. It represents a property of the	string	No		**us.fdps.2016-01-06T16:47:54Z.000/20/400**	No

DRAFT

	individual TH message within the BATCH_TH message.					
singleTH/THmetadata/ eramGufi_316aFPId	Contains the eramGufi flight plan identifier from the SFDPS system, the unique flight plan identifier. It represents a property of the individual TH message within the BATCH_TH message.	T_eramGufi	No	**"[A-Z]{2}\d{5}[1-7]\d{2}"**	**KU60474400**	No
singleTH/THmetadata/ eramGufi_316aDT	Contains the date and time representation of the eramGufi flight plan. It represents a property of the individual TH message within the BATCH_TH message.	T_eramGufiDT	No	**"\d{4}-\d{2}-\d{2}T\d{2}:\d{2}:\d{2}Z/[A-Za-z0-9/]+"**	**2016-01-06T16:47:54Z/000/20/400**	No
singleTH/THmetadata/ uuidGufi	This element specifies a unique identifier for a flight that conforms to the Universal Unique Identifier standard and conforms to the GUFI requirements of FIXM 3.0. It represents a property of the individual TH message within the BATCH_TH message.	string	No		**18561ed7-74ed-4748-bae9-9e74b406c730**	No
singleTH/THmetadata/ flightPlanSeqNo	Contains the sequence number for each flight plan. It represents a property of the individual TH message within the BATCH_TH message.	integer	No		**4**	No
singleTH/TH/sourceId_ 00e	This element specifies the source identification that includes a UTC time followed by a four-digit sequence number.	string	No	**"\d{10}"** Ten digits, of which the first 6 digits represent the UTC time (*hhmmss*) and the last four digits, represent the message sequence number in the range [0000-9999].	**2359359001**, where the first 6 digits are the UTC time (23:59:35 UTC) and the last 4 digits are sequence number of the message (9001).	Yes
singleTH/TH/sourceTi me_00e1	This element specifies the time component of the previous element, sourceId_00e.	string	No	**"[0-2]\d_[0-5]\d_[0-5]\d"** Time in the format *hh_mm_ss,* where: *hh* stands for the 2-digit-hour in the range 00-23, *mm* stands for the 2-digit minutes in the range 00-59, and *ss* stands for the 2-digit seconds in the range 00-59.	**23_59_35** that represents 23:59:35 UTC	Yes

DRAFT

singleTH/TH/sourceSeqNo_00e2	This element specifies the message sequence number component of the sourceId_00e element.	string	No	**"\d{4}"** Four-digit number in the range [0000-9999].	**9001**	Yes
singleTH/TH/flightId_02a	Aircraft ID, or flight ID (also called Call Sign).	string	No	**"\+?[A-Z][A-Z0-9]{1,6}"** One uppercase alphabetic character followed by one to six alphanumeric characters.	**AAL20**	Yes
singleTH/TH/computerId_02d	ERAM Computer Identification (Computer ID).	string	No	**"([0-9][A-HJ-NP-Z0-9]{2})|** **([0-9]{2}[A-HJ-NP-Z0-9])"** The element includes a digit, followed by two alphanumeric characters with the exception of the letters **I** and **O**, as specified by the pattern above.	**020**	Yes
singleTH/TH/sspId_167a	Site Specific Plan Identifier. It is assigned by IFPA to uniquely identify a flight plan in each ERAM facility.	string	No	**"\d{1,4}"** One to four digits.	**24**	No
singleTH/TH/groundSpeed_05b	This element contains the aircraft ground speed in knots.	string	No	**"\d{3}"** The format is three digits. If the aircraft ground speed is not available, this element contains three zeroes.	**357** Aircraft ground speed is 357 knots. **000** Indicates that the aircraft ground speed is missing.	Yes
singleTH/TH/assignedAlt_08a	Assigned altitude or flight level expressed in hundreds of feet. Only one of the altitude elements assignedAlt_08a, assignedAlt_08b, assignedAlt_08c, assignedAlt_08d, assignedAlt_08e, assignedAlt_08f, assignedAlt_08g, assignedAlt_08h may be included in the message.	string	No	**"(\d{2,3}) | VFR"** The format consists of either two to three digits, or the constant string **VFR**. Three digits are required for ARTS III, thus a leading zero needs to be used when necessary.	Assigned altitude of 34,000 feet: **340** Assigned altitude 9,000 feet ARTS III: **090**	No
singleTH/TH/assignedAlt_08b	Fixed value of **OTP** which indicates VFR-ON-Top. It specifies that the aircraft is flying above the clouds in VFR conditions. It may only be specified if none of the other assignedAtl_08 elements is included in the message.	string	No	**"OTP"**	Fixed value of **OTP.**	No

DRAFT

singleTH/TH/assignedAlt_08c	VFR-ON-Top with altitude. It represents an IFR flight operating above the clouds in VFR conditions at the specified assigned altitude. It may only be specified if none of the other assignedAtl_08 elements is included in the message.	string	No	"**OTP/\d{2,3}**" The format is the constant string **OTP/** followed by two to three digits that represent the assigned altitude in hundreds of feet.	Aircraft flying VFR-ON-Top at 25,000 feet: **OTP/250**	No
singleTH/TH/assignedAlt_08d	The assigned block of altitudes for the flight to fly at. It may only be specified if none of the other assignedAtl_08 elements is included in the message.	string	No	**"\d{2,3}B\d{2,3}"** The format is two to three digits, followed by the letter **B**, followed by two to three digits. The leading and trailing two to three digits define the block of altitudes in hundreds of feet for the flight to fly at. The lowest altitude must be listed first.	Assigned altitude block of 8,000 feet to 14,000 feet: **80B140**	No
singleTH/TH/assignedAlt_08e	Element used for IFR flights operating above a specified altitude. It may only be specified if none of the other assignedAtl_08 elements is included in the message.	string	No	**"ABV/\d{2,3}"** The format consists of the string **ABV/** followed by two to three digits that represent the altitude in hundreds of feet above which the flight is flying.	Aircraft is flying above 60,000 feet. **ABV/600**	No
singleTH/TH/assignedAlt_08f	Assigned Altitude/FIX/Altitude element specifies the altitudes to and from a fix for the flight to fly at. It may only be specified if none of the other assignedAtl_08 elements is included in the message.	string	No	**"(\d{2,3}/[A-Z0-9]{2,5}/\d{2,3})| (\d{2,3}/[A-Z0-9]{2,5}\d{6}/\d{2,3}) | (\d{2,3}/\d{4}[A-Z]?/\d{4,5}[A-Z]?/\d{2,3})"** The altitudes are specified in hundreds of feet in a two to three digit format. The fix is specified using the same format as the coordination fix element "coordFix_06a". The fix cannot be the departure or arrival point.	**240/DAL350010/220** Flight flies at altitude 24,000 feet to the fix radial distance fix and then descend to altitude 22,000 feet.	No
singleTH/TH/assignedAlt_08g	It is used to specify that the flight is flying Visual Flight Rules (VFR). It can only have the value **VFR**. It may only be specified if none of the other assignedAtl_08 elements is included in the message.	string	No	**"VFR"**	The string **VFR.**	No

singleTH/TH/assignedAlt_08h	It is used to specify that the flight is flying VFR at a specified altitude. It may only be specified if none of the other assignedAtl_08 elements is included in the message.	string	No	**“VFR/\d{2,3}"** The format consists of the string **VFR/** followed by two to three digits that represent an altitude in hundreds of feet.	**VFR/75** The aircraft is flying VFR at 7,500 feet.	No
singleTH/TH/reportedAlt_54a	The element is used to specify the reported altitude. For aircraft with operative Mode C capability, this element contains the Mode C altitude. For aircraft without Mode C capability or with non-operative Mode C capability, this element may contain the controller reported altitude. If there is no Mode C or controller reported altitude, or the reported altitude is negative, this element contains “0” or "000" or is optional.	string	No	**"\d{1,3}"** The format consists of one to three digits that represent the reported aircraft altitude in hundreds of feet. Leading zeros may be inserted for altitudes of less than 3 digits.	**310** The aircraft reported altitude is 31,000 feet.	No It may be absent only if element *reportedAlt_54b* = **N**
singleTH/TH/reportedAlt_54b	This field is the reported altitude B4 indicator. The ERAM controllers’ full data block used for tracking an aircraft has a special indicator for the B4 character of the full data block.	string	No	**“[ABCFNTVX^v+-/]”** The format of this element is one character as follows: A - Reported altitude (controller entered) equals single assigned altitude. B - Beacon reported altitude is in conformance or controller entered reported altitude is in the block for an aircraft which has been assigned an altitude block (B1 to B3 - low altitude limit of block and C1 to C3=high altitude limit of block). C - Beacon reported altitude is within Altitude Conformance Limits feet. F - Reported altitude (controller entered) equals first altitude or (beacon reported) is within Altitude Conformance Limits of first altitude when assigned altitude is (d)dd/fix/(d)dd and the first altitude is displayed in Field B. N - No beacon reported altitude has	**B**	Yes

DRAFT

				been received for the aircraft; no controller entered reported altitude exists for the aircraft; or the aircraft's rate of change is questionable and Computed Rate of Change is being used to make further conformance checks. T - Interim altitude is currently being displayed in the assigned altitude field (B1 through B3). V - Beacon reported or controller entered reported altitude, when no assigned altitude exists for the aircraft. X - Beacon reported altitude becomes disestablished. (C1-C3 also contains `X' character.) ^ - Beacon reported or controller entered reported altitude is below assigned altitude when flight is climbing v - Beacon reported or controller entered reported altitude is above assigned altitude when flight is descending + - Beacon reported altitude exceeds upper conformance limit for an aircraft which has reached it assigned altitude or the controller entered reported altitude exceeds the assigned altitude for a non-Mode C aircraft which has previously been reported at the assigned altitude. - - Beacon reported altitude is less than lower conformance limit for an aircraft which has reached its assigned altitude or the controller entered reported altitude is less than the assigned altitude for a non-Mode C aircraft which has previously been reported at the assigned altitude. / - Flight type is `OTP' or `VFR'		
singleTH/TH/reportedAlt_54c	The element specifies the reported altitude C4 indicator.	string	No	**"[#X]"**	**#**	No

DRAFT

	The ERAM controllers full data block used for tracking an aircraft has a special indicator for the C4 character of the full data block as follows: If the aircraft is not responding with the Mode C altitude, the controller entered reported altitude is displayed in *reportedAlt_54c* with a pound sign (#) or X in position C4 whenever (1) the controller entered reported altitude does not equal the assigned altitude or is not within the assigned altitude block, (2) no assigned altitude has been entered, or (3) the assigned altitude is VFR, VFR/(d)dd, OTP, or OTP/(d)dd. In either case for a Mode C reported altitude or a controller reported altitude, when an interim altitude is displayed in *reportedAlt_54b* the B4 character position contains the letter "T" and the reported altitude, or either the lower or upper altitude of an assigned block altitude is displayed in *reportedAlt_54c*. In the case where a controller entered reported altitude exists, a pound sign (#) or X is displayed in the C4 position.					
singleTH/TH/controllingFacility_138a	This element specifies the facility that is controlling the flight.	string	No	**"LLL"** The format consists of three letters. The value is 3 blank characters if identification of the controlling facility is not available.	ZCH	No
singleTH/TH/controllingSector_138b	This element specifies the controlling ARTS position or the controlling ERAM ARTCC sector number. The Controlling Sector is the sector/position that is controlling the flight. The value is 00	string	No	**"\d[A-Z0-9]"** The format is one digit followed by one alphanumeric.	1W	No

DRAFT

	if identification of the controlling sector is not available.					
singleTH/TH/receivingFacility_139a	This element specifies the facility that is receiving the flight.	string	No	**“[A-Z]{3}”** The format is three letters.	AIA	No
singleTH/TH/receivingSector_139b	This element specifies the receiving ARTS position or the receiving ERAM ARTCC sector number. The receiving sector is the sector/position that is receiving the flight. The value is 00 if identification of the receiving sector is not available.	string	No	**“[0-9][A-Z0-9]”** The format is one digit followed by one alphanumeric.	1W	No
singleTH/TH/trackPosition_23d	This element specifies the track position form ERAM to ATM-IPOP.	string	No	**"\d{6}[A-Z]/\d{7}[A-Z]"** It is a latitude/longitude pair, separated by a virgule. For latitude, the first two digits are degrees, the second two are minutes, and the last two are seconds. The letter can be N or S. For the longitude, the first three digits are degrees, the second two are minutes, and the last two are seconds. The letter can be E or W.	393106N/0842535W	Yes
singleTH/TH/trackVelocity_23e	This element specifies the velocity in nautical miles per hour.	string	No	**"[+\-]\d\d{0,3}/[+\-SH]\d\d{0,3}"** Minimum length = 5 Maximum length = 11 It has an X and a Y component separated by a virgule. Either component can be preceded by either a + or – sign, followed by one to three digits. The second component can be preceded by an S or an H, for speed only (NM/hr), or heading only (degrees), respectively.	+46/-355 -0/S439	Yes
singleTH/TH/coastIndicator_153a	This element specifies an action indicator. It has only one possible value, C for Coast.	string	No	**“C”**	**C**	No
singleTH/TH/timeOfTrackData_170a	This element specifies the date and time the track data was stored.	dateTime	No	**dateTime**	**2014-06-20T20:17:52**	No
singleTH/TH/targetPosi	This element specifies the ERAM	string	No	**"\d{6}[A-Z]/\d{7}[A-Z]"**	393106N/0842535W	No

DRAFT

singleTH/TH/tion_171a	radar target position, in latitude/longitude format, as described in message number.			Length = 16 It is a latitude/longitude pair, separated by a virgule.		
singleTH/TH/targetAlt_172a	This element specifies the Mode C Target altitude (corrected for barometric pressure) in hundreds of feet.	string	No	**"\d{3}"** The format is three digits, with leading zeroes required. If the target altitude is negative, targetAlt_172a is **000**.	**290** **000**	No
singleTH/TH/targetAltInvalid_172b	If the element *targetAlt_172a* is not valid, this field is set to **INV**, for invalid Mode C altitude.	string	No	**"INV"**	**INV**	No
singleTH/TH/timeOfTargetData_173a	This element specifies the date and time of the correlated target.	dateTime	No	**dateTime**	**2014-06-20T20:17:50**	No

DRAFT

5.5.1.51 Batch Track Information [BATCH_TH] - Diagram

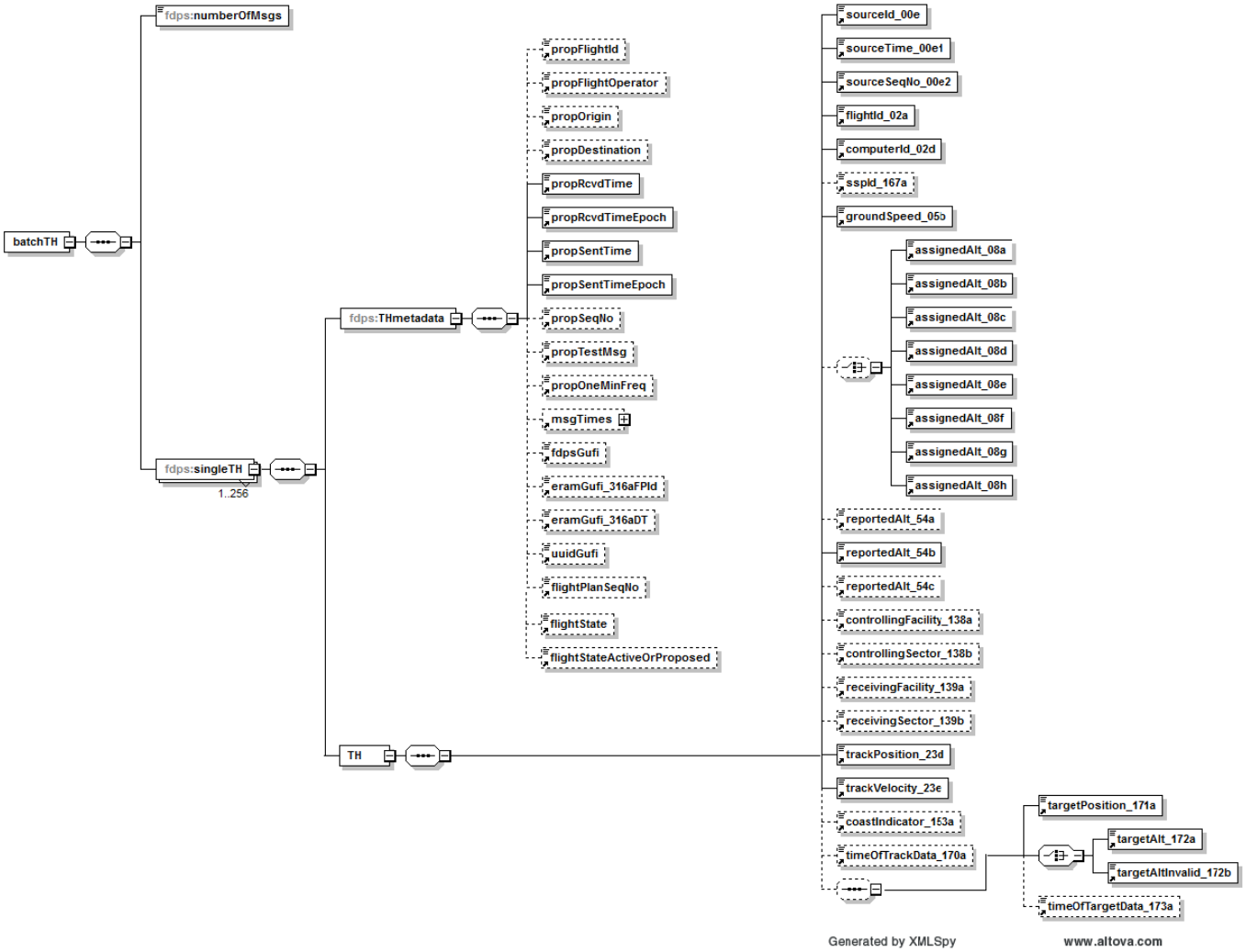

5.5.1.52 Batch Track Information Message in FIXM Format [BATCH_TH_FIXM] – Data Elements

The following elements of the BATCH_TH message in Simple XML format are not translated in the FIXM format of the message:

- sourceId_00e
- sourceTime_00e1
- sourceSeqNo_00e2
- reportedAlt_54b
- reportedAlt_54c

Name [BATCH_TH_FIXM]	Name [BATCH_TH]	Definition	Type	Complex ?	Format/Permissible Values	Example	Required ?
flight/supplementalData/additionalFlightInformation/nameValue/@name flight/supplementalData/additionalFlightInformation/nameValue/@value	FDPS_SequenceNo	Sequence number assigned by SFDPS to each message it receives from HADDS. The attribute *name* includes the constant string "MSG_SEQ_NO", and the attribute *value* contains the sequence number value.	@name: @value: fb:FreeTextType	No	@name: ”MSG_SEQ_NO” @value: xs:nonNegativeInteger xs:maxInclusive value="999999999"	@name="MSG_SEQ_NO" @value="6860416"	Yes
flight/departure/@departurePoint	FDPS_Origin/departurePoint_26a	Attribute used to specify the first point or other initial entity where the air traffic control/management system route starts.	fb:FreeTextType	No	xs:string minLength=2, maxLength=12 **"([A-Z0-9]{2,5}) | ([A-Z0-9]{2,5}\d{6}) | (\d{4}[A-Z]?/\d{4,5}[A-Z]?)”** Any of the standard ways to represent a fix can be used for this element (fix name, lat/long, or fix-radial-distance), including the standard airport designators.	**AB** **DFW** **KDFW** **SHP090015** **ATOKA300040** **3500N/04000W**	No
flight/arrival/@arrivalPoint	FDPS_DestId/destination_27a	The final point or other final entity where the air traffic control/management system route terminates.	fb:FreeTextType	No	xs:string minLength=2, maxLength=12 **"([A-Z0-9]{2,5}) | ([A-Z0-9]{2,5}\d{6}) | (\d{4}[A-Z]?/\d{4,5}[A-Z]?)”**	**AB** **DFW** **KDFW** **SHP090015** **ATOKA300040**	No

Name [BATCH_TH_FIXM]	Name [BATCH_TH]	Definition	Type	Complex ?	Format/Permissible Values	Example	Required ?
					Any of the standard ways to represent a fix can be used for this element (fix name, lat/long, or fix-radial-distance), including the standard airport designators.	**3500N/04000W**	
flight/operator/operatingOrganization/organization/@name	FDPS_FlightOperator/OPRIndicator_918f	Attribute used to specify the full official name of the State, Organization, Authority, aircraft operating agency, handling agency engaged in or offering to engage in aircraft operation.	ff:TextNameType	No	xs:string	UAL	No
flight/flightIdentification/@aircraftIdentification	flightId_02a	Name used by Air Traffic Services units to identify and communicate with an aircraft.	fb:FlightIdentifierType	No	**"[A-Z0-9]{7}"**	**AAL20**	Yes
flight/@system	propSourceSystem	This attribute indicates which SFDPS system generated the message.	fb:ProvenanceSystemType	No	xs:string maxLength=128	FDPS1	Yes
flight/@timestamp	propRcvdTime	This attribute conatins the time at which the message was received by SFDPS.	ff:TimeType	No	xs:dateTime	2015-12-18T22:19:02.028Z	Yes
flight/@centre	center	This attribute specifies the code of the ARTCC (or FIR) that produced the data.	fb:ProvenanceCentreType	No	xs:string	ZAU	Yes
flight/arrival/runwayPositionAndTime/runwayTime/[estimated|actual]/@time	arrivalTime	This attribute specifies the proposed or the actual time of arrival at destination, set according to the flight state.	ff:TimeType	No	xs:dateTime	2014-06-20T20:17:52	Yes
flight/departure/runwayPositionAndTime/runwayTime/[actual|estimated]/@time	departureTime	This element specifies the proposed or actual departure time, set according to the flight state.	ff:TimeType	No	xs:dateTime	2014-06-20T20:17:52	Yes

DRAFT

Name [BATCH_TH_FIXM]	Name [BATCH_TH]	Definition	Type	Complex ?	Format/Permissible Values	Example	Required ?
flight/flightStatus/@fdpsFlightStatus	flightState	This attribute contains the current status of the flight as specified by SFDPS.	nas:SfdpsFlightStatusType	Yes	xs:string "PROPOSED|ACTIVE|COMPLETED|CANCELLED|DROPPED"	ACTIVE	Yes
flight/supplementalData/additionalFlightInformation/nameValue/@name flight/supplementalData/additionalFlightInformation/nameValue/@value	fdpsGufi	The name value pair specifies the SFDPS GUFI, an identifier on every message that positively identifies what flight the message is for.	fb:FreeTextType	No	xs:string @name: "FDPS_GUFI" @value: "us\.fdps\.\d{4}-\d{2}-\d{2}T\d{2}:\d{2}:\d{2}Z\.[A-Za-z0-9/]+"	name="FDPS_GUFI" value="us.fdps.2015-12-18T16:59:10Z.000/14/100"/>	Yes
flight/flightPlan/@identifier	eramGufi_316aFPId	This attribute specifies the unique flight plan identifier.	fb:FreeTextType	No	xs:string "[A-Z]{2}\d{5}[1-7]\d{2}"	"KU68378100"	No
flight/supplementalData/additionalFlightInformation/nameValue/@name flight/supplementalData/additionalFlightInformation/nameValue/@value		The flight supplemental data is used to indicate that a flight message is a test message, by setting the attribute *name* to "**SIMULATED_FLIGHT**" and the attribute *value* to "**true**".	*@name:* *@value*: *fb:FreeTextType*	No	*@name:* **"[A-Z0-9_]{1,20}"** *@value:* **xs:string** **minLength=1, maxLength=100** @name = **"SIMULATED_FLIGHT"** @value = **"true"**	@name = **"SIMULATED_FLIGHT"** @value = **"true"**	No
flight/departure/@departurePoint	FDPS_Origin/departurePoint_26a	Attribute used to specify the first point or other initial entity where the air traffic control/management system route starts.	fb:FreeTextType	No	xs:string minLength=2, maxLength=12 **"([A-Z0-9]{2,5}) | ([A-Z0-9]{2,5}\d{6}) | (\d{4}[A-Z]?/\d{4,5}[A-Z]?)"** Any of the standard ways to represent a fix can be used for this element (fix name, lat/long, or fix-radial-distance), including the standard airport designators.	**AB** **DFW** **KDFW** **SHP090015** **ATOKA3000403500N/04000W**	No

DRAFT

Name [BATCH_TH_FIXM]	Name [BATCH_TH]	Definition	Type	Complex ?	Format/Permissible Values	Example	Required ?
flight/arrival/@arrivalPoint	FDPS_DestId /destination _27a	The final point or other final entity where the air traffic control/management system route terminates.	fb:FreeTextType	No	xs:string minLength=2, maxLength=12 **"([A-Z0-9]{2,5}) | ([A-Z0-9]{2,5}\d{6}) | (\d{4}[A-Z]?/\d{4,5}[A-Z]?)"** Any of the standard ways to represent a fix can be used for this element (fix name, lat/long, or fix-radial-distance), including the standard airport designators.	**AB** **DFW** **KDFW** **SHP090015** **ATOKA300040** **3500N/04000W**	No
flight/operator/operatingOrganization/organization/@name	FDPS_Flight Operator/OPRIndicator_918f	Attribute used to specify the full official name of the State, Organization, Authority, aircraft operating agency, handling agency engaged in or offering to engage in aircraft operation.	ff:TextNameType	No	xs:string	UAL	No
flight/flightIdentification/@aircraftIdentification	FDPS_FlightId/flightId_02a	Name used by Air Traffic Services units to identify and communicate with an aircraft.	fb:FlightIdentifierType	No	**"[A-Z0-9]{7}"**	**AAL20**	Yes
flight/flightIdentification/@computerId	computerId_02d	A unique identification assigned by ERAM to each flight plan.	fb:FreeTextType	No	**"([0-9][A-HJ-NP-Z0-9]{2})| ([0-9]{2}[A-HJ-NP-Z0-9])"** The element includes a digit, followed by two alphanumeric characters with the exception of the letters **I** and **O**, such as *ddd, ddL, dLd, dLL*.	**020**	No
flight/flightIdentification/@siteSpecificPlanId	sspId_167a	Site Specific Plan Identifier. It is assigned by Instrument Flight Procedures Automation (IFPA) to uniquely identify a flight plan in each ERAM facility.	fb:CountType	No	**"\d{1,4}"** One to four-digits.	**24**	No
flight/enRoute/position/actualSpeed/surveillance	groundSpeed_05b	This element contains the measured horizontal speed of the aircraft relative to a fixed point on the ground for flights being tracked by	ff:GroundSpeedType	Yes	**xs:double** The Groundspeed type represents any ground speed measurement, in metric or imperial, as specified	**357** uom=KNOTS Aircraft ground speed is 357	Yes

DRAFT

Name [BATCH_TH_FIXM]	Name [BATCH_TH]	Definition	Type	Complex ?	Format/Permissible Values	Example	Required ?
		surveillance or satellite.			by the "*uom*" attribute.	knots.	
flight/enRoute/position/actualSpeed/surveillance/@uom	groundSpeed_05b	Attribute of groundspeed indicating units of ground speed measurement.	ff:GroundSpeedMeasureType	No	**"KILOMETRES_PER_HOUR|KNOTS"**	**KNOTS**	Yes
flight/enRoute/position/@reportSource	groundSpeed_05b	The source of the current position report information.	fb:ProvenanceSourceType	No	**"SURVEILLANCE"**	**SURVEILLANCE**	No
flight/assignedAltitude/simple flight/assignedAltitude/simple/@uom flight/assignedAltitude/simple/@ref	assignedAlt_08a	Simple altitude: single measurement above reference point. It represents the only NAS altitude that maps directly to the core ICAO altitude types. Only one of the altitude elements *simple*, *vfrOnTop*, *vfrOnTopPlus*, *block*, *above*, *altFixAlt*, *vfr*, *vfrPlus* may be included in the message.	assignedAltitude/simple: nas:SimpleAltitudeType uom: ff:AltitudeMeasureType ref: ff:AltitudeReferenceType	Yes	**"xs:double"** *@uom*: "**FEET|METERS**" *@ref*: **"MEAN_SEA_LEVEL| FLIGHT_LEVEL"**	Assigned altitude of 34,000 feet: **34000** *Uom*: **FEET** *Ref*: **MEAN_SEA_LEVEL**	No
flight/assignedAltitude/vfrOnTop	assignedAlt_08b	The presence of this element indicates VFR-ON-Top. It specifies that the aircraft is flying above the clouds in VFR conditions. Only one of the altitude elements *simple*, *vfrOnTop*, *vfrOnTopPlus*, *block*, *above*, *altFixAlt*, *vfr*, *vfrPlus* may be included in the message.	Nas:VfrOnTopAltitudeType	Yes	Empty element.		No
flight/assignedAltitude/vfrOnTopPlus flight/assignedAltitude/vfrOnTopPlus/@uom	assignedAlt_08c	VFR-ON-Top with altitude. It represents an Instrument Flight Rules (IFR) flight operating above the clouds in VFR conditions at the specified assigned altitude. Only one of the altitude elements *simple*, *vfrOnTop*, *vfrOnTopPlus*,	nas:VfrOnTopPlusAltitudeType uom: ff:AltitudeMeasureType	No	**"xs:double"** uom: **"FEET|METRES"**	Aircraft flying VFR-ON-Top at 25,000 feet: **25000** *uom*: **FEET**	No

Name [BATCH_TH_FIXM]	Name [BATCH_TH]	Definition	Type	Complex ?	Format/Permissible Values	Example	Required ?
		block, *above*, *altFixAlt*, *vfr*, *vfrPlus* may be included in the message.					
flight/assignedAltitude/block/above flight/assignedAltitude/block/above/@uom	assignedAlt_08d	The bottom level of the assigned block of altitudes for the flight to fly at. Only one of the altitude elements *simple*, *vfrOnTop*, *vfrOnTopPlus*, *block*, *above*, *altFixAlt*, *vfr*, *vfrPlus* may be included in the message.	ff:AltitudeType uom: ff:AltitudeMeasureType	Yes	**"xs:double"** uom: **"FEET|METRES"**	*above:* **8000** *uom:* **FEET**	No
flight/assignedAltitude/block/below flight/assignedAltitude/block/below/@uom	assignedAlt_08d	The top level of the assigned block of altitudes for the flight to fly at. Only one of the altitude elements *simple*, *vfrOnTop*, *vfrOnTopPlus*, *block*, *above*, *altFixAlt*, *vfr*, *vfrPlus* may be included in the message.	ff:AltitudeType uom: ff:AltitudeMeasureType	Yes	**"xs:double"** uom: **"FEET|METRES"**	*below:* **14000** *uom:* **FEET**	No
flight/assignedAltitude/above flight/assignedAltitude/above/@uom	assignedAlt_08e	Element used for IFR flights operating above a specified altitude. Only one of the altitude elements *simple*, *vfrOnTop*, *vfrOnTopPlus*, *block*, *above*, *altFixAlt*, *vfr*, *vfrPlus* may be included in the message.	nas:AboveAltitudeType uom: ff:AltitudeMeasureType	Yes	**"xs:double"** uom: **"FEET|METRES"**	Aircraft is flying above 60,000 feet: **60000** **uom:** **FEET**	No
flight/assignedAltitude/altFixAlt/point	assignedAlt_08f	*assignedAltitude/altFixAlt* element is defined as an altitude prior to a specified fix, the specified fix itself, and altitude post specified fix. The element *altFixAlt/point* defines the specified fix associated with the altitude. The fix cannot be the departure or arrival point. Only one of the altitude elements *simple*, *vfrOnTop*, *vfrOnTopPlus*, *block*, *above*, *altFixAlt*, *vfr*, *vfrPlus* may be included in the message.	fb:SignificantPointType (abstract type) *fb:FixPointType/ ff:GeographicalLocationType/ fb:RelativePointType*	Yes	- *fb:FixPointType* **"[A-Z0-9]{2,5}"** - *ff:GeographicalLocationType* List of two **xs:double** (latitude followed by longitude) - *fb:RelativePointType* - fix: **"[A-Z0-9]{2,5}"** - distance: *ff:DistanceType* **xs:double** - radial: *fb:DirectionType* **xs:double** minInclusive = 0	**MDG**	No

Name [BATCH_TH_FIXM]	Name [BATCH_TH]	Definition	Type	Complex ?	Format/Permissible Values	Example	Required ?
					maxInclusive =360		
flight/assignedAltitude/altFixAlt/pre flight/assignedAltitude/altFixAlt/pre/@uom	assignedAlt_08f	*assignedAltitude/altFixAlt* element is defined as an altitude prior to a specified fix, the specified fix itself, and altitude post specified fix. The element *altFixAlt/pre* defines the altitude before the specified fix. Only one of the altitude elements *simple*, *vfrOnTop*, *vfrOnTopPlus*, *block*, *above*, *altFixAlt*, *vfr*, *vfrPlus* may be included in the message.	ff:AltitudeType uom: ff:AltitudeMeasureType	Yes	**"xs:double"** uom: **"FEET|METRES"**	**24000** **uom:** **FEET**	No.
flight/assignedAltitude/altFixAlt/post flight/assignedAltitude/altFixAlt/post/@uom	assignedAlt_08f	*assignedAltitude/altFixAlt* element is defined as an altitude prior to a specified fix, the specified fix itself, and altitude post specified fix. The element *altFixAlt/pre* defines the altitude after the specified fix. Only one of the altitude elements *simple*, *vfrOnTop*, *vfrOnTopPlus*, *block*, *above*, *altFixAlt*, *vfr*, *vfrPlus* may be included in the message.	ff:AltitudeType uom: ff:AltitudeMeasureType	Yes	**"xs:double"** uom: **"FEET|METRES"**	**22000** **uom:** **FEET**	No.
flight/assignedAltitude/vfr	assignedAlt_08g	Its presence in the message specifies that the flight is flying Visual Flight Rules (VFR). Only one of the altitude elements *simple*, *vfrOnTop*, *vfrOnTopPlus*, *block*, *above*, *altFixAlt*, *vfr*, *vfrPlus* may be included in the message.	nas:VfrAltitudeType	Yes	**Empty element**		No
flight/assignedAltitude/vfrPlus flight/assignedAltitude/vfrPlus/@uom	assignedAlt_08h	It is used to specify that the flight is flying VFR at a specified altitude. Only one of the altitude elements *simple*, *vfrOnTop*, *vfrOnTopPlus*, *block*, *above*, *altFixAlt*, *vfr*, *vfrPlus* may be included in the message.	nas:VfrPlusAltitudeType uom: ff:AltitudeMeasureType	Yes	**"xs:double"** uom: **"FEET|METRES"**	The aircraft is flying VFR at 7,500 feet: **7500** uom: **FEET**	No

DRAFT

Name [BATCH_TH_FIXM]	Name [BATCH_TH]	Definition	Type	Complex ?	Format/Permissible Values	Example	Required ?
flight/enRoute/position/altitude flight/enRoute/position/altitude/@uom	reportedAlt_54a	The element is used to specify the reported altitude. For aircraft with operative Mode C capability, this element contains the Mode C altitude. For aircraft without Mode C capability or with non-operative Mode C capability, this element may contain the controller reported altitude.	ff:AltitudeType	Yes	**xs:double** **@uom:** **"FEET|METRES"**	**31000** **FEET** The aircraft reported altitude is 31,000 feet.	No
flight/controllingUnit/@unitIdentifier	controllingFacility_138a	This element specifies the identifier of the Air Traffic Control unit in control of the aircraft.	ff:AtcUnitNameType	No	**"([A-Z]{4})|([A-Za-z0-9]{1, })"**	ZCH	No
flight/controllingUnit/@sectorIdentifier	controllingSector_138b	This element specifies the identifier of the Air Traffic Control sector in control of the aircraft.	fb:FreeStringType	No	**"\d[A-Z0-9]"** The format is one digit followed by one alphanumeric.	1W	No
flight/enRoute/boundaryCrossings/handoff/receivingUnit/@unitIdentifier	receivingFacility_139a	This element specifies the Air Traffic Control unit receiving control of the aircraft as a result of a handoff.	ff:AtcUnitNameType	No	**"([A-Z]{4})|([A-Za-z0-9]{1, })"**	AIA	No
flight/enRoute/boundaryCrossings/handoff/receivingUnit/@sectorIdentifier	receivingSector_139b	This element specifies the ATC sector receiving control of the aircraft as a result of a handoff.	fb:FreeStringType	No	**"[0-9][A-Z0-9]"** The format is one digit followed by one alphanumeric.	1W	No
flight/enRoute/position/position/location/pos	trackPosition_23d	This element specifies the actual location of an active flight as reported by surveillance, for a flight tracked by radar, or from the position part of a pilot progress report, for an oceanic flight or a flight operating in a non-radar airspace.	*ff:GeographicalLocationType*	Yes	List of two **xs:double** : latitude followed by longitude: **"\d{6}[A-Z] \d{7}[A-Z]"** For latitude, the first two digits are degrees, the second two are minutes, and the last two are seconds. For the longitude, the first three digits are degrees, the second two are minutes, and the last two are seconds.	393106 0842535	Yes
flight/enRoute/position/position/location/@srsName	trackPosition_23d	This attribute specifies the name of the coordinate reference system	xs:string	No	fixed=**"urn:ogc:def:crs:EPSG::4326"**	urn:ogc:def:crs:EPSG::4326	Yes

DRAFT

Name [BATCH_TH_FIXM]	Name [BATCH_TH]	Definition	Type	Complex ?	Format/Permissible Values	Example	Required ?
		(CRS) that defines the semantics of the lat/long pair *flight/enRoute/position/position/@pos* according to the ISO6709 standard. FIXM uses only "urn:ogc:def:crs:EPSG::4326".					
flight/enRoute/position/trackVelocity/x	trackVelocity_23e	This element specifies the velocity of the aircraft along the X axis. NOTE Certain values for x/y velocity can indicate this is only a (directionless) speed or only a heading.	ff:AirspeedInIasOrMachType	Yes	xs:double	46 uom="KNOTS"	Yes
flight/enRoute/position/trackVelocity/x/@uom	trackVelocity_23e	Attribute of the element *trackVelocity/x* indicating measurement in metric, imperial, or Mach units.	ff:AirspeedMeasureType	No	**"KILOMETRES_PER_HOUR|KNOTS|MACH"**	KNOTS	Yes
flight/enRoute/position/trackVelocity/y	trackVelocity_23e	This element specifies the velocity of the aircraft along the Y-axis. NOTE Certain values for x/y velocity can indicate this is only a (directionless) speed or only a heading.	ff:AirspeedInIasOrMachType	Yes	**xs:double** It can be preceded by the character "S" or "H", for speed only or heading only, respectively.	S439 uom="KNOTS"	Yes
flight/enRoute/position/trackVelocity/y/@uom	trackVelocity_23e	Attribute of the element *trackVelocity/y* indicating measurement in metric, imperial, or Mach units.	ff:AirspeedMeasureType	No	**"KILOMETRES_PER_HOUR|KNOTS|MACH"**	KNOTS	Yes
flight/enRoute/position/actualSpeed/surveillance	trackVelocity_23e	The measured horizontal speed of the aircraft relative to a fixed point on the ground for flights being tracked by surveillance or satellite.	ff:GroundspeedType	Yes	**xs:double**	500 uom="KNOTS"	No
flight/enRoute/position/actualSpeed/surveillance/@uom	trackVelocity_23e	Attribute of the element *actualSpeed/surveillance* indicating units of ground speed measurement.	ff:GroundspeedMeasureType	No	**"KILOMETRES_PER_HOUR|KNOTS"**	KNOTS	Yes

DRAFT

Name [BATCH_TH_FIXM]	Name [BATCH_TH]	Definition	Type	Complex ?	Format/Permissible Values	Example	Required ?
flight/enRoute/position/track	trackVelocity_23e	The direction the aircraft is flying over the ground relative to the true north. It is the heading of the aircraft as impacted by the wind.	fb:DirectionType	Yes	**xs:double minInclusive=0 maxInclusive=360**	40	Yes
flight/enRoute/position/track/@uom	trackVelocity_23e	This element indicates angle units of measure.	ff:AngleMeasureType	No	**"DEGREES"**	**DEGREES**	Yes
flight/enRoute/position/@coastIndicator	coastIndicator_153a	This element contains an indicator the aircraft was unexpectedly not detected by radar (after a period of tracking).	Nas:NasCoastIndicatorType	No	**"COASTING"**	**COASTING**	No
flight/enRoute/position/@positionTime	timeOfTrackData_170a	This element specifies the time associated with the current position of an active flight, from the radar surveillance report or the pilot report.	ff:TimeType	No	xs:dateTime	**2014-06-20T20:17:52**	No
flight/enRoute/position/targetPosition/pos	targetPosition_171a	This element specifies the aircraft target position as a latitude/longitude pair, as reported by one raw radar return.	ff:GeographicLocationType	Yes	List of doubles that contain the latitude and longitude of the location, in order of latitude first, then longitude: **"\d{6}[A-Z] \d{7}[A-Z]"**	393106 0842535	No
flight/enRoute/position/targetPosition/@srsName	targetPosition_171a	This element names the coordinate reference system (CRS) for the element *targetPosition* that defines the semantics of the lat/long pair according to the ISO6709 standard. FIXM uses only "urn:ogc:def:crs:EPSG::4326".	xs:string	No	"urn:ogc:def:crs:EPSG::4326"	urn:ogc:def:crs:EPSG::4326	Yes
flight/enRoute/position/targetAltitude	targetAlt_172a	This element specifies the Mode C Target altitude corrected for barometric pressure. Suspected	Nas:NasPositionAltitudeType	Yes	xs:double		No

Name [BATCH_TH_FIXM]	Name [BATCH_TH]	Definition	Type	Complex ?	Format/Permissible Values	Example	Required ?
		invalid altitudes are marked with the *@invalid* attribute.					
flight/enRoute/position/targetAltitude/@uom	targetAlt_172a	A required altitude measure unit.	ff:AltitudeMeasureType	No	**"FEET|METRES"**	**FEET**	Yes
flight/enRoute/position/targetAltitude/@invalid	targetAltInvalid_172b	Indicates whether the value of the element *targetAltitude* is invalid.	Nas:InvalidIndicatorType	No	**"INVALID"**	**INVALID**	No
flight/enRoute/position/@targetPositionTime	timeOfTargetData_173a	This element specifies the time associated with the raw radar return.	ff:TimeType	No	**xs:dateTime**	**2014-06-20T20:17:50**	No

5.5.1.53 Drop Track Information [RH] – Data Elements

Element Name [RH]	Element Definition	Type	Complex ?	Format/Permissible Values	Example	Required?
sourceId_00e	This element specifies the source identification that includes a UTC time followed by a four-digit sequence number.	string	No	**"\d{10}"** Ten digits, of which the first 6 digits represent the UTC time (*hhmmss*) and the last four digits, represent the message sequence number in the range [0000-9999].	**2359359001**, where the first 6 digits are the UTC time (23:59:35 UTC) and the last 4 digits are sequence number of the message (9001).	Yes
sourceTime_00e1	This element specifies the time component of the previous element, sourceId_00e.	string	No	**"[0-2]\d_[0-5]\d_[0-5]\d"** Time in the format *hh_mm_ss,* where: *hh* stands for the 2-digit-hour in the range 00-23, *mm* stands for the 2-digit minutes in the range 00-59, and *ss* stands for the 2-digit seconds in the range 00-59.	**23_59_35** that represents 23:59:35 UTC	Yes

Element Name [RH]	Element Definition	Type	Complex ?	Format/Permissible Values	Example	Required?
sourceSeqNo_00e2	This element specifies the message sequence number component of the sourceId_00e element.	string	No	**“\d{4}”** Four-digit number in the range [0000-9999].	**9001**	Yes
flightId_02a	Aircraft ID, or flight ID (also called Call Sign).	string	No	**"\+?[A-Z][A-Z0-9]{1,6}"** One uppercase alphabetic character followed by one to six alphanumeric characters.	**AAL20**	Yes
computerId_02d	ERAM Computer Identification (Computer ID).	string	No	"([0-9][A-HJ-NP-Z0-9]{2})| ([0-9]{2}[A-HJ-NP-Z0-9])" The element includes a digit, followed by two alphanumeric characters with the exception of the letters **I** and **O**, as specified by the pattern above.	**020**	Yes
sspId_167a	Site Specific Plan Identifier. It is assigned by IFPA to uniquely identify a flight plan in each ERAM facility.	string	No	**"\d{1,4}"** One to four digits.	**24**	No

DRAFT

5.5.1.54 Drop Track Information [RH] - Diagram

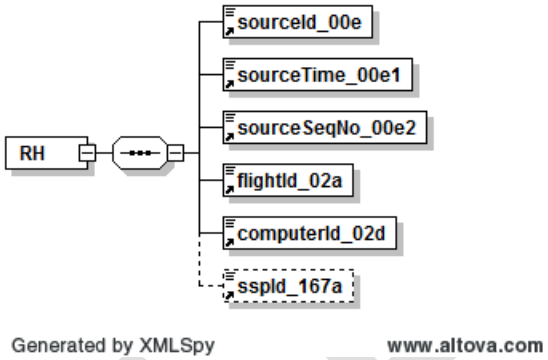

5.5.1.55 Drop Track Information Message in FIXM Format [RH_FIXM] – Data Elements

The following elements of the RH message in Simple XML format are not translated in the FIXM format of the message:

- sourceId_00e
- sourceTime_00e1
- sourceSeqNo_00e2

Name [RH_FIXM]	Name [RH]	Element Definition	Type	Complex?	Format/Permissible Values	Example	Required?
flight/supplementalData/additionalFlightInformation/nameValue/@name flight/supplementalData/additionalFlightInformation/nameValue/@value	FDPS_SequenceNo	Sequence number assigned by SFDPS to each message it receives from HADDS. The attribute *name* includes the constant string "MSG_SEQ_NO", and the attribute *value* contains the sequence number value.	@name: @value: fb:FreeTextType	No	@name="MSG_SEQ_NO" @value: xs:nonNegativeInteger xs:maxInclusive value="999999999"	@name="MSG_SEQ_NO" @value="6860416"	Yes
flight/departure/@departurePoint	FDPS_Origin/departurePoint_26a	Attribute used to specify the first point or other initial entity where the air traffic control/management system route starts.	fb:FreeTextType	No	xs:string minLength=2, maxLength=12 **"([A-Z0-9]{2,5}) |**	**AB** **DFW** **KDFW** **SHP090015**	No

Name [RH_FIXM]	Name [RH]	Element Definition	Type	Complex?	Format/Permissible Values	Example	Required?
					([A-Z0-9]{2,5}\d{6}) | (\d{4}[A-Z]?/\d{4,5}[A-Z]?)" Any of the standard ways to represent a fix can be used for this element (fix name, lat/long, or fix-radial-distance), including the standard airport designators.	**ATOKA300040 3500N/04000W**	
flight/arrival/@arrivalPoint	destination_27a	The final point or other final entity where the air traffic control/management system route terminates.	fb:FreeTextType	No	xs:string minLength=2, maxLength=12 **"([A-Z0-9]{2,5}) | ([A-Z0-9]{2,5}\d{6}) | (\d{4}[A-Z]?/\d{4,5}[A-Z]?)"** Any of the standard ways to represent a fix can be used for this element (fix name, lat/long, or fix-radial-distance), including the standard airport designators.	**AB DFW KDFW SHP090015 ATOKA300040 3500N/04000W**	No
flight/operator/operating Organization/organization /@name	FDPS_FlightOperator/OPRIndicator_918f	Attribute used to specify the full official name of the State, Organization, Authority, aircraft operating agency, handling agency engaged in or offering to engage in aircraft operation.	ff:TextNameType	No	xs:string	UAL	No
flight/@system	propSourceSystem	This attribute indicates which SFDPS system generated the message.	fb:ProvenanceSystemType	No	xs:string maxLength=128	FDPS1	Yes
flight/@timestamp	propRcvdTime	This attribute conatins the time at which the message was received by SFDPS.	ff:TimeType	No	xs:dateTime	2015-12-18T22:19:02.028Z	Yes
flight/@centre	center	This attribute specifies the code of the	fb:ProvenanceCentreType	No	xs:string	ZAU	Yes

DRAFT

Name [RH_FIXM]	Name [RH]	Element Definition	Type	Complex?	Format/Permissible Values	Example	Required?
		ARTCC (or FIR) that produced the data.					
flight/arrival/runwayPositionAndTime/runwayTime/[estimated|actual]/@time	arrivalTime	This attribute specifies the proposed or the actual time of arrival at destination, set according to the flight state.	ff:TimeType	No	xs:dateTime	2014-06-20T20:17:52	Yes
flight/departure/runwayPositionAndTime/runwayTime/[actual|estimated]/@time	departureTime	This element specifies the proposed or actual departure time, set according to the flight state.	ff:TimeType	No	xs:dateTime	2014-06-20T20:17:52	Yes
flight/flightStatus/@fdpsFlightStatus	flightState	This attribute contains the current status of the flight as specified by SFDPS.	nas:SfdpsFlightStatusType	Yes	xs:string "PROPOSED|ACTIVE|COMPLETED|CANCELLED|DROPPED"	ACTIVE	Yes
flight/supplementalData/additionalFlightInformation/nameValue/@name flight/supplementalData/additionalFlightInformation/nameValue/@value	fdpsGufi	The name value pair specifies the SFDPS GUFI, an identifier on every message that positively identifies what flight the message is for.	fb:FreeTextType	No	xs:string @name: "FDPS_GUFI" @value: "us\.fdps\.\d{4}-\d{2}-\d{2}T\d{2}:\d{2}:\d{2}Z\.[A-Za-z0-9/]+"	name="FDPS_GUFI" value="us.fdps.2015-12-18T16:59:10Z.000/14/100"/>	Yes
flight/flightPlan/@identifier	eramGufi_316aFPId	This attribute specifies the unique flight plan identifier.	fb:FreeTextType	No	xs:string "[A-Z]{2}\d{5}[1-7]\d{2}"	"KU68378100"	No
flight/gufi	uuidGufi	This element contains a reference that uniquely identifies a flight and that is independent of any particular system. This reference conforms to the Universal Unique Identifier standard.	fb:GloballyFlightIdentifierType		xs:string "[0-9a-fA-F]{8}\-[0-9a-fA-F]{4}\-4[0-9a-fA-F]{3}\-[89aAbB][0-9a-fA-F]{3}\-[0-9a-fA-F]{12}"	4aaf92be-ac0a-4dba-998f-9e56f5d450b6	Yes

DRAFT

Name [RH_FIXM]	Name [RH]	Element Definition	Type	Complex?	Format/Permissible Values	Example	Required?
flight/flightIdentification/ @aircraftIdentification	flightId_02a	Name used by Air Traffic Services units to identify and communicate with an aircraft.	fb:FlightIdentifierType	No	**"[A-Z0-9]{7}"**	**AAL20**	Yes
flight/supplementalData/additionalFlightInformation /nameValue/@name flight/supplementalData/additionalFlightInformation /nameValue/@value		The flight supplemental data is used to indicate that a flight message is a test message, by setting the attribute *name* to "**SIMULATED_FLIGHT**" and the attribute *value* to "**true**".	*@name:* *@value*: *fb:FreeTextType*	No	*@name:* **"[A-Z0-9_]{1,20}"** *@value:* **xs:string minLength=1, maxLength=100** @name = **"SIMULATED_FLIGHT"** @value = **"true"**	@name = **"SIMULATED_FLIGHT"** @value = **"true"**	No
flight/flightIdentification/ @computerId	computerId_02d	A unique identification assigned by ERAM to each flight plan.	fb:FreeTextType	No	**"([0-9][A-HJ-NP-Z0-9]{2})| ([0-9]{2}[A-HJ-NP-Z0-9])"** The element includes a digit, followed by two alphanumeric characters with the exception of the letters **I** and **O**, such as *ddd, ddL, dLd, dLL*.	**020**	No
flight/flightIdentification/ @siteSpecificPlanId	sspId_167a	Site Specific Plan Identifier. It is assigned by Instrument Flight Procedures Automation (IFPA) to uniquely identify a flight plan in each ERAM facility.	fb:CountType	No	**"\d{1,4}"** One to four-digits.	**24**	No

5.5.1.56 Interim Altitude Information [LH] – Data Elements

Element Name [LH]	Element Definition	Type	Complex?	Format/Permissible Values	Example	Required?
sourceId_00e	This element specifies the source	string	No	**"\d{10}"**	**2359359001**, where	Yes

Element Name [LH]	Element Definition	Type	Complex ?	Format/Permissible Values	Example	Required?
	identification that includes a UTC time followed by a four-digit sequence number.			Ten digits, of which the first 6 digits represent the UTC time (*hhmmss*) and the last four digits, represent the message sequence number in the range [0000-9999].	the first 6 digits are the UTC time (23:59:35 UTC) and the last 4 digits are sequence number of the message (9001).	
sourceTime_00e1	This element specifies the time component of the previous element, sourceId_00e.	string	No	**"[0-2]\d_[0-5]\d_[0-5]\d"** Time in the format *hh_mm_ss,* where: *hh* stands for the 2-digit-hour in the range 00-23, *mm* stands for the 2-digit minutes in the range 00-59, and *ss* stands for the 2-digit seconds in the range 00-59.	**23_59_35** that represents 23:59:35 UTC	Yes
sourceSeqNo_00e2	This element specifies the message sequence number component of the sourceId_00e element.	string	No	**"\d{4}"** Four-digit number in the range [0000-9999].	**9001**	Yes
interimAlt_76a	This element specifies the letter D that is used to delete the interim altitude stored by ATM-IPOP. The message has to include either this element or the element *interimAlt_76b.*	string	No	**"D"**	**D**	Yes, if element *interimAlt_76b* is not included in the message
interimAlt_76b	This element specifies the interim altitude for the flight in hundreds of feet. The message has to include either this element or the element *interimAlt_76a.*	string	No	**"\d{1,3}"** The format is one to three digits, in the range 0 to 999.	**240** Aircraft interim altitude of 24,000 feet.	Yes, if element *interimAlt_76a* is not included in the message
flightId_02a	Aircraft ID, or flight ID (also called Call Sign).	string	No	**"\+?[A-Z][A-Z0-9]{1,6}"** One uppercase alphabetic character followed by one to six alphanumeric characters.	**AAL20**	Yes
computerId_02d	ERAM Computer Identification (Computer ID).	string	No	**"([0-9][A-HJ-NP-Z0-9]{2})|** **([0-9]{2}[A-HJ-NP-Z0-9])"** The element includes a digit, followed by two	**020**	Yes

DRAFT

Element Name [LH]	Element Definition	Type	Complex ?	Format/Permissible Values	Example	Required?
				alphanumeric characters with the exception of the letters **I** and **O**, as specified by the pattern above.		
sspId_167a	Site Specific Plan Identifier. It is assigned byIFPA to uniquely identify a flight plan in each ERAM facility.	string	No	**"\d{1,4}"** One to four digits.	**24**	No

5.5.1.57 Interim Altitude Information [LH] - Diagram

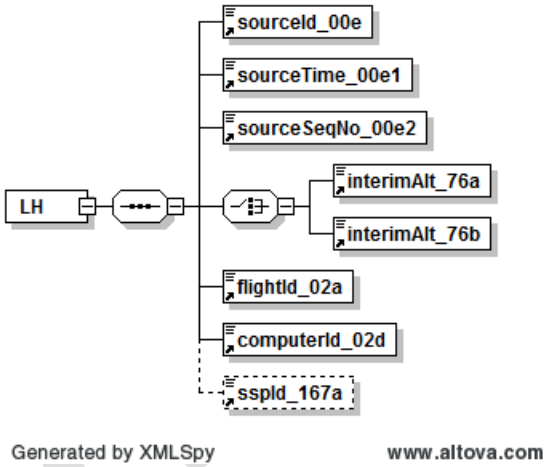

5.5.1.58 Interim Altitude Information Message in FIXM Format [LH_FIXM] – Data Elements

The following elements of the LH message in Simple XML format are not translated in the FIXM format of the message:

- sourceId_00e
- sourceTime_00e1

- sourceSeqNo_00e2

Name [LH_FIXM]	Name [LH]	Element Definition	Type	Complex ?	Format/Permissible Values	Example	Required?
flight/supplementalData/additionalFlightInformation/nameValue/@name flight/supplementalData/additionalFlightInformation/nameValue/@value	FDPS_SequenceNo	Sequence number assigned by SFDPS to each message it receives from HADDS. The attribute *name* includes the constant string "MSG_SEQ_NO", and the attribute *value* contains the sequence number value.	@name: @value: fb:FreeTextType	No	@name: ”MSG_SEQ_NO” @value: xs:nonNegativeInteger xs:maxInclusive value="999999999"	@name="MSG_SEQ_NO" @value="6860416"	Yes
flight/departure/@departurePoint	FDPS_Origin/departurePoint_26a	Attribute used to specify the first point or other initial entity where the air traffic control/management system route starts.	fb:FreeTextType	No	xs:string minLength=2, maxLength=12 **"([A-Z0-9]{2,5}) | ([A-Z0-9]{2,5}\d{6}) | (\d{4}[A-Z]?/\d{4,5}[A-Z]?)”** Any of the standard ways to represent a fix can be used for this element (fix name, lat/long, or fix-radial-distance), including the standard airport designators.	**AB** **DFW** **KDFW** **SHP090015** **ATOKA300040** **3500N/04000W**	No
flight/arrival/@arrivalPoint	FDPS_DestId/destination_27a	The final point or other final entity where the air traffic control/management system route terminates.	fb:FreeTextType	No	xs:string minLength=2, maxLength=12 **"([A-Z0-9]{2,5}) | ([A-Z0-9]{2,5}\d{6}) | (\d{4}[A-Z]?/\d{4,5}[A-Z]?)”** Any of the standard ways to represent a fix can be used for this element (fix name, lat/long, or fix-radial-distance), including the standard airport designators.	**AB** **DFW** **KDFW** **SHP090015** **ATOKA300040** **3500N/04000W**	No
flight/operator/operatingOrganization/organization/@name	FDPS_FlightOperator/OPRIndi	Attribute used to specify the full official name of the State, Organization, Authority,	ff:TextNameType	No	xs:string	UAL	No

DRAFT

Name [LH_FIXM]	Name [LH]	Element Definition	Type	Complex ?	Format/Permissible Values	Example	Required?
	cator_918f	aircraft operating agency, handling agency engaged in or offering to engage in aircraft operation.					
flight/@system	propSourceSystem	This attribute indicates which SFDPS system generated the message.	fb:ProvenanceSystemType	No	xs:string maxLength=128	FDPS1	Yes
flight/@timestamp	propRcvdTime	This attribute conatins the time at which the message was received by SFDPS.	ff:TimeType	No	xs:dateTime	2015-12-18T22:19:02.028Z	Yes
flight/@centre	center	This attribute specifies the code of the ARTCC (or FIR) that produced the data.	fb:ProvenanceCentreType	No	xs:string	ZAU	Yes
flight/arrival/runwayPositionAndTime/runwayTime/estimated/@time	arrivalTime	This attribute specifies the proposed or the actual time of arrival at destination, set according to the flight state.	ff:TimeType	No	xs:dateTime	2014-06-20T20:17:52	Yes
flight/departure/runwayPositionAndTime/runwayTime/actual/@time	departureTime	This element specifies the proposed or actual departure time, set according to the flight state.	ff:TimeType	No	xs:dateTime	2014-06-20T20:17:52	Yes
flight/flightStatus/@fdpsFlightStatus	flightState	This attribute contains the current status of the flight as specified by SFDPS.	nas:SfdpsFlightStatusType	Yes	xs:string "PROPOSED|ACTIVE|COMPLETED|CANCELLED|DROPPED"	ACTIVE	Yes
flight/supplementalData/additionalFlightInformation/nameValue/@name flight/supplementalData/additionalFlightInformation/nameValue/@value	fdpsGufi	The name value pair specifies the SFDPS GUFI, an identifier on every message that positively identifies what flight the message is for.	fb:FreeTextType	No	xs:string @name: "FDPS_GUFI" @value: "us\.fdps\.\d{4}-\d{2}-\d{2}T\d{2}:\d{2}:\d{2}Z\.[A-Za-z0-9/]+"	name="FDPS_GUFI" value="us.fdps.2015-12-18T16:59:10Z.000/14/100"/>	Yes

DRAFT

Name [LH_FIXM]	Name [LH]	Element Definition	Type	Complex ?	Format/Permissible Values	Example	Required?
flight/flightPlan/@identifier	eramGufi_316aFPId	This attribute specifies the unique flight plan identifier.	fb:FreeTextType	No	xs:string "[A-Z]{2}\d{5}[1-7]\d{2}"	"KU68378100"	No
flight/gufi	uuidGufi	This element contains a reference that uniquely identifies a flight and that is independent of any particular system. This reference conforms to the Universal Unique Identifier standard.	fb:GloballyFlightIdentifierType		xs:string "[0-9a-fA-F]{8}\-[0-9a-fA-F]{4}\-4[0-9a-fA-F]{3}\-[89aAbB][0-9a-fA-F]{3}\-[0-9a-fA-F]{12}"	4aaf92be-ac0a-4dba-998f-9e56f5d450b6	Yes
flight/interimAltitude	interimAlt_76a interimAlt_76b	This element specifies the interim altitude the flight is cleared to maintain different from that in the flight plan. This element is set to a NULL value when the message is used to indicate that a previously received interim altitude needs to be deleted.	nas:SimpleAltitudeType	Yes	xs:double or NULL value: xsi:nil="true"	Aircraft interim altitude of 24,000 feet: **240000** uom=**FEET**	Yes
flight/interimAltitude/@uom	interimAlt_76a interimAlt_76b	The attribute *uom* specifies the unit of measure for the *interimAltitude* element: FEET/METRES.	ff:AltitudeMeasureType	No	**"FEET|METRES"**	**FEET**	Yes
flight/flightIdentification/@aircraftIdentification	flightId_02a	Name used by Air Traffic Services units to identify and communicate with an aircraft.	fb:FlightIdentifierType	No	**"[A-Z0-9]{7}"**	**AAL20**	Yes
flight/supplementalData/additionalFlightInformation/nameValue/@name flight/supplementalData/additionalFlightInformation/nameValue/@value		The flight supplemental data is used to indicate that a flight message is a test message, by setting the attribute *name* to "**SIMULATED_FLIGHT**" and the attribute *value* to "**true**".	*@name:* *@value*: *fb:FreeTextType*	No	*@name:* **"[A-Z0-9_]{1,20}"** *@value:* **xs:string** **minLength=1, maxLength=100** @name = **"SIMULATED_FLIGHT"** @value = **"true"**	@name = **"SIMULATED_FLIGHT"** @value = **"true"**	No

DRAFT

Name [LH_FIXM]	Name [LH]	Element Definition	Type	Complex ?	Format/Permissible Values	Example	Required?
flight/flightIdentification/@computerId	computerId_02d	A unique identification assigned by ERAM to each flight plan.	fb:FreeTextType	No	**"([0-9][A-HJ-NP-Z0-9]{2})| ([0-9]{2}[A-HJ-NP-Z0-9])"** The element includes a digit, followed by two alphanumeric characters with the exception of the letters **I** and **O**, such as *ddd, ddL, dLd, dLL*.	**020**	No
flight/flightIdentification/@siteSpecificPlanId	sspId_167a	Site Specific Plan Identifier. It is assigned by Instrument Flight Procedures Automation (IFPA) to uniquely identify a flight plan in each ERAM facility.	fb:CountType	No	**"\d{1,4}"** One to four-digits.	**24**	No

5.5.1.59 ARTS Flow Control Track/Full Data Block Information [HZ] – Data Elements

Element Name [HZ]	Element Definition	Type	Complex ?	Format/Permissible Values	Example	Required?
sourceId_00e	This element specifies the source identification that includes a UTC time followed by a four-digit sequence number.	string	No	**"\d{10}"** Ten digits, of which the first 6 digits represent the UTC time (*hhmmss*) and the last four digits, represent the message sequence number in the range [0000-9999].	**2359359001**, where the first 6 digits are the UTC time (23:59:35 UTC) and the last 4 digits are sequence number of the message (9001).	Yes
sourceTime_00e1	This element specifies the time component of the previous element, sourceId_00e.	string	No	**"[0-2]\d_[0-5]\d_[0-5]\d"** Time in the format *hh_mm_ss,* where: *hh* stands for the 2-digit-hour in the range 00-23, *mm* stands for the 2-digit minutes in the range 00-59, and *ss* stands for the 2-digit seconds in the range 00-59.	**23_59_35** that represents 23:59:35 UTC	Yes

Element Name [HZ]	Element Definition	Type	Complex ?	Format/Permissible Values	Example	Required?
sourceSeqNo_00e2	This element specifies the message sequence number component of the sourceId_00e element.	string	No	**"\d{4}"** Four-digit number in the range [0000-9999].	**9001**	Yes
addresseeARTS_00d	This element contains the ARTS facility identification to which ERAM is to relay the message.	string	No	**"[A-Z]{1,3}"**	**NNN**	Yes
addresserARTS_00a	This element contains the ARTS facility identification from which ERAM is to relay the message.	string	No	**"[A-Z]{1,3}"**	**MMM**	Yes
flightId_02a	Aircraft ID, or flight ID (also called Call Sign).	string	No	**"\+?[A-Z][A-Z0-9]{1,6}"** One uppercase alphabetic character followed by one to six alphanumeric characters.	**AAL20**	Yes
computerId_02d	ERAM Computer Identification (Computer ID).	string	No	**"([0-9][A-HJ-NP-Z0-9]{2})|** **([0-9]{2}[A-HJ-NP-Z0-9])"** The element includes a digit, followed by two alphanumeric characters with the exception of the letters **I** and **O**, as specified by the pattern above.	**020**	Yes
sspId_167a	Site Specific Plan Identifier. It is assigned by IFPA to uniquely identify a flight plan in each ERAM facility.	string	No	**"\d{1,4}"** One to four digits.	**24**	No
groundSpeed_05b	This element contains the aircraft ground speed in knots.	string	No	**"\d{3}"** The format is three digits. If the aircraft ground speed is not available, this element contains three zeroes.	**357** Aircraft ground speed is 357 knots. **000** Indicates that the aircraft ground speed is missing.	Yes
assignedAlt_08a	Assigned altitude or flight level expressed in hundreds of feet. It may only be specified if none of the other altitude elements (assignedAlt_08a, assignedAlt_08c, interimAlt_76bT, assignedAlt_08d, reportedAlt_54aC) is	string	No	**"(\d{2,3}) | VFR"** The format consists of either two to three digits, or the constant string **VFR**. Three digits are required for ARTS III, thus a leading zero needs to be used when necessary.	Assigned altitude of 34,000 feet: **340** Assigned altitude 9,000 feet ARTS III: **090**	No

DRAFT

Element Name [HZ]	Element Definition	Type	Complex ?	Format/Permissible Values	Example	Required?
	included in the message.					
assignedAlt_08c	VFR-ON-Top with altitude. It represents an IFR flight operating above the clouds in VFR conditions at the specified assigned altitude. It may only be specified if none of the other altitude elements (assignedAlt_08a, assignedAlt_08c, interimAlt_76bT, assignedAlt_08d, reportedAlt_54aC) is included in the message.	string	No	"**OTP/\d{2,3}**" The format is the constant string **OTP**/ followed by two to three digits that represent the assigned altitude in hundreds of feet.	Aircraft flying VFR-ON-Top at 25,000 feet: **OTP/250**	No
interimAlt_76bT	This element specifies the interim altitude for the flight in hundreds of feet It may only be specified if none of the other altitude elements (assignedAlt_08a, assignedAlt_08c, interimAlt_76bT, assignedAlt_08d, reportedAlt_54aC) is included in the message.	string	No	**"\d{1,3}T"** One to three digits in the range 0 – 999.	**240**	No
assignedAlt_08d	The assigned block of altitudes for the flight to fly at. It may only be specified if none of the other altitude elements (assignedAlt_08a, assignedAlt_08c, interimAlt_76bT, assignedAlt_08d, reportedAlt_54aC) is included in the message.	string	No	**"\d{2,3}B\d{2,3}"** The format is two to three digits, followed by the letter **B**, followed by two to three digits. The leading and trailing two to three digits define the block of altitudes in hundreds of feet for the flight to fly at. The lowest altitude must be listed first.	Assigned altitude block of 8,000 feet to 14,000 feet: **80B140**	No
reportedAlt_54aC	This element contains the reported Mode C altitude. It may only be specified if none of the other altitude elements (assignedAlt_08a, assignedAlt_08c, interimAlt_76bT, assignedAlt_08d, reportedAlt_54aC) is included in the message.	string	No	**"\d{3}C"** Three digits followed by the letter C. The digits represent the aircraft altitude in hundreds of feet. Leading zeroes have to be inserted when necessary. If there is no Mode C or the reported altitude is negative, this element contains "000".	**090C** Mode C altitude of 9,000 feet.	No
trackPosition_23d	This element specifies the track position form ERAM to ATM-IPOP.	string	No	**"\d{6}[A-Z]/\d{7}[A-Z]"** It is a latitude/longitude pair, separated by a virgule. For latitude, the first two digits are degrees, the second two are minutes, and the	393106N/0842535W	Yes

DRAFT

Element Name [HZ]	Element Definition	Type	Complex ?	Format/Permissible Values	Example	Required?
				last two are seconds. The letter can be N or S. For the longitude, the first three digits are degrees, the second two are minutes, and the last two are seconds. The letter can be E or W.		

DRAFT

5.5.1.60 ARTS Flow Control Track/Full Data Block Information [HZ] - Diagram

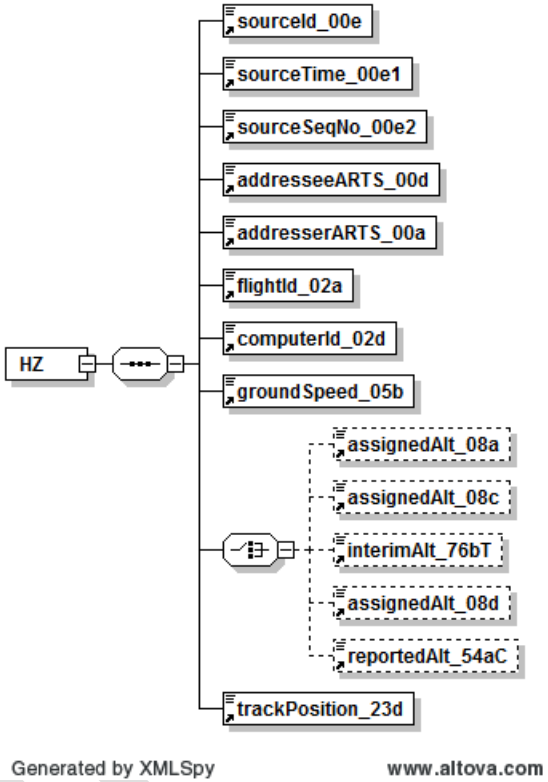

5.5.1.61 ARTS Flow Control Track/Full Data Block Information [HZ_FIXM] – Data Elements

The following elements of the HZ message in Simple XML format are not translated in the FIXM format of the message:

- sourceId_00e
- sourceTime_00e1
- sourceSeqNo_00e2
- addresseeARTS_00d

- addresserARTS_00a

Name [HZ_FIXM]	Name [HZ]	Definition	Type	Complex?	Format/Permissible Values	Example	Required?
flight/supplementalData/additionalFlightInformation/nameValue/@name flight/supplementalData/additionalFlightInformation/nameValue/@value	FDPS_SequenceNo	Sequence number assigned by SFDPS to each message it receives from HADDS. The attribute *name* includes the constant string "MSG_SEQ_NO", and the attribute *value* contains the sequence number value.	@name: @value: fb:FreeTextType	No	@name: ”MSG_SEQ_NO” @value: xs:nonNegativeInteger xs:maxInclusive value="999999999"	@name="MSG_SEQ_NO" @value="6860416"	Yes
flight/departure/@departurePoint	FDPS_Origin/departurePoint_26a	Attribute used to specify the first point or other initial entity where the air traffic control/management system route starts.	fb:FreeTextType	No	xs:string minLength=2, maxLength=12 **"([A-Z0-9]{2,5}) | ([A-Z0-9]{2,5}\d{6}) | (\d{4}[A-Z]?/\d{4,5}[A-Z]?)”** Any of the standard ways to represent a fix can be used for this element (fix name, lat/long, or fix-radial-distance), including the standard airport designators.	**AB** **DFW** **KDFW** **SHP090015** **ATOKA300040** **3500N/04000W**	No
flight/arrival/@arrivalPoint	destination_27a	The final point or other final entity where the air traffic control/management system route terminates.	fb:FreeTextType	No	xs:string minLength=2, maxLength=12 **"([A-Z0-9]{2,5}) | ([A-Z0-9]{2,5}\d{6}) | (\d{4}[A-Z]?/\d{4,5}[A-Z]?)”** Any of the standard ways to represent a fix can be used for this element (fix name, lat/long, or fix-radial-distance), including the standard airport designators.	**AB** **DFW** **KDFW** **SHP090015** **ATOKA300040** **3500N/04000W**	No
flight/operator/operatingOrganization/organization/@name	FDPS_FlightOperator/OPRIndicator_918f	Attribute used to specify the full official name of the State, Organization, Authority, aircraft operating agency, handling agency engaged in or offering to engage in aircraft operation.	ff:TextNameType	No	xs:string	UAL	No

DRAFT

Name [HZ_FIXM]	Name [HZ]	Definition	Type	Complex?	Format/Permissible Values	Example	Required?
flight/@system	propSourceSystem	This attribute indicates which SFDPS system generated the message.	fb:ProvenanceSystemType	No	xs:string maxLength=128	FDPS1	Yes
flight/@timestamp	propRcvdTime	This attribute conatins the time at which the message was received by SFDPS.	ff:TimeType	No	xs:dateTime	2015-12-18T22:19:02.028Z	Yes
flight/@centre	center	This attribute specifies the code of the ARTCC (or FIR) that produced the data.	fb:ProvenanceCentreType	No	xs:string	ZAU	Yes
flight/arrival/runwayPositionAndTime/runwayTime/[estimated|actual]/@time	arrivalTime	This attribute specifies the proposed or the actual time of arrival at destination, set according to the flight state.	ff:TimeType	No	xs:dateTime	2014-06-20T20:17:52	Yes
flight/departure/runwayPositionAndTime/runwayTime/[actual|estimated]/@time	departureTime	This element specifies the proposed or actual departure time, set according to the flight state.	ff:TimeType	No	xs:dateTime	2014-06-20T20:17:52	Yes
flight/flightStatus/@fdpsFlightStatus	flightState	This attribute contains the current status of the flight as specified by SFDPS.	nas:SfdpsFlightStatusType	Yes	xs:string "PROPOSED|ACTIVE|COMPLETED|CANCELLED|DROPPED"	ACTIVE	Yes
flight/supplementalData/additionalFlightInformation/nameValue/@name flight/supplementalData/additionalFlightInformation/nameValue/@value	fdpsGufi	The name value pair specifies the SFDPS GUFI, an identifier on every message that positively identifies what flight the message is for.	fb:FreeTextType	No	xs:string @name: "FDPS_GUFI" @value: "us\.fdps\.\d{4}-\d{2}-\d{2}T\d{2}:\d{2}:\d{2}Z\.[A-Za-z0-9/]+"	name="FDPS_GUFI" value="us.fdps.2015-12-18T16:59:10Z.000/14/100"/>	Yes
flight/flightPlan/@identifier	eramGufi_316aFPId	This attribute specifies the unique flight plan identifier.	fb:FreeTextType	No	xs:string "[A-Z]{2}\d{5}[1-7]\d{2}"	"KU68378100"	No
flight/gufi	uuidGufi	This element contains a reference that uniquely identifies a flight and that is	fb:GloballyFlightIdentifierType		xs:string "[0-9a-fA-F]{8}\-[0-9a-fA-	4aaf92be-ac0a-4dba-998f-	Yes

Name [HZ_FIXM]	Name [HZ]	Definition	Type	Complex?	Format/Permissible Values	Example	Required?
		independent of any particular system. This reference conforms to the Universal Unique Identifier standard.			F]{4}\-4[0-9a-fA-F]{3}\-[89aAbB][0-9a-fA-F]{3}\-[0-9a-fA-F]{12}"	9e56f5d450b6	
flight/flightIdentification/@aircraftIdentification	flightId_02a	Name used by Air Traffic Services units to identify and communicate with an aircraft.	fb:FlightIdentifierType	No	**"[A-Z0-9]{7}"**	**AAL20**	Yes
flight/supplementalData/additionalFlightInformation/nameValue/@name flight/supplementalData/additionalFlightInformation/nameValue/@value	flightId_02a	The flight supplemental data is used to indicate that a flight message is a test message, by setting the attribute *name* to "**SIMULATED_FLIGHT**" and the attribute *value* to "**true**".	*@name:* *@value*: *fb:FreeTextType*	No	*@name:* **"[A-Z0-9_]{1,20}"** *@value:* **xs:string** **minLength=1, maxLength=100** @name = **"SIMULATED_FLIGHT"** @value = **"true"**	@name = **"SIMULATED_FLIGHT"** @value = **"true"**	No
flight/flightIdentification/@computerId	computerId_02d	A unique identification assigned by ERAM to each flight plan.	fb:FreeTextType	No	**"([0-9][A-HJ-NP-Z0-9]{2})|([0-9]{2}[A-HJ-NP-Z0-9])"** The element includes a digit, followed by two alphanumeric characters with the exception of the letters **I** and **O**, such as *ddd, ddL, dLd, dLL*.	**020**	No
flight/flightIdentification/@siteSpecificPlanId	sspId_167a	Site Specific Plan Identifier. It is assigned by Instrument Flight Procedures Automation (IFPA) to uniquely identify a flight plan in each ERAM facility.	fb:CountType	No	**"\d{1,4}"** One to four-digits.	**24**	No

DRAFT

Name [HZ_FIXM]	Name [HZ]	Definition	Type	Complex?	Format/Permissible Values	Example	Required?
flight/enRoute/position/actualSpeed/surveillance	groundSpeed_05b	This element contains the measured horizontal speed of the aircraft relative to a fixed point on the ground for flights being tracked by surveillance or satellite.	ff:GroundSpeedType	Yes	**xs:double** The Groundspeed type represents any ground speed measurement, in metric or imperial, as specified by the "*uom*" attribute.	**357** uom=KNOTS Aircraft ground speed is 357 knots.	Yes
flight/enRoute/position/actualSpeed/surveillance/@uom	groundSpeed_05b	Attribute of groundspeed indicating units of ground speed measurement.	ff:GroundSpeedMeasureType	No	**"KILOMETRES_PER_HOUR|KNOTS"**	**KNOTS**	Yes
flight/enRoute/position/@reportSource	groundSpeed_05b	The source of the current position report information.	fb:ProvenanceSourceType	No	**"SURVEILLANCE"**	**SURVEILLANCE**	No
flight/assignedAltitude/simple	assignedAlt_08a	Simple altitude: single measurement above reference point. It represents the only NAS altitude that maps directly to the core ICAO altitude types. Only one of the altitude elements *simple*, *vfrOnTop*, *vfrOnTopPlus*, *block*, *above*, *altFixAlt*, *vfr*, *vfrPlus* may be included in the message.	nas:SimpleAltitudeType	Yes	**"xs:double"**	Assigned altitude of 34,000 feet: **34000** *uom*: **FEET** *Ref*: **MEAN_SEA_LEVEL**	No
flight/assignedAltitude/simple/@uom	assignedAlt_08a		ff:AltitudeMeasureType	No	"**FEET|METERS**"	**FEET**	Yes
flight/assignedAltitude/simple/@ref	assignedAlt_08a		ff:AltitudeReferenceType	No	**"MEAN_SEA_LEVEL| FLIGHT_LEVEL"**	**MEAN_SEA_LEVEL**	Yes
flight/assignedAltitude/vfrOnTopPlus	assignedAlt_08c	VFR-ON-Top with altitude. It represents an Instrument Flight Rules (IFR) flight operating above the clouds in VFR conditions at the specified assigned altitude. Only one of the altitude elements *simple*, *vfrOnTop*, *vfrOnTopPlus*, *block*, *above*,	nas:VfrOnTopPlusAltitudeType	No	**"xs:double"** uom:	Aircraft flying VFR-ON-Top at 25,000 feet: **25000** *uom*: **FEET**	No

DRAFT

Name [HZ_FIXM]	Name [HZ]	Definition	Type	Complex?	Format/Permissible Values	Example	Required?
		altFixAlt, *vfr*, *vfrPlus* may be included in the message.					
flight/assignedAltitude/vfrOnTopPlus/@uom	assignedAlt_08c	This attribute specifies the altitude measure unit for the element *assignedAltitude/vfrOnTopPlus*.	ff:AltitudeMeasureType	No	**"FEET|METRES"**	**FEET**	Yes
flight/interimAltitude	interimAlt_76bT	This element specifies the interim altitude the flight is cleared to maintain different from that in the flight plan.	nas:SimpleAltitudeType	Yes	xs:double	interimAltitude of 240,000 feet: **240000** uom=**FEET**	No
flight/interimAltitude/@uom	interimAlt_76bT	This attribute specifies the unit of measure for the *interimAltitude* element: FEET/METRES.	*ff:AltitudeMeasureType*	No	**"FEET|METRES"**	**FEET**	Yes
flight/assignedAltitude/block/above	assignedAlt_08d	The bottom level of the assigned block of altitudes for the flight to fly at. Only one of the altitude elements *simple*, *vfrOnTop*, *vfrOnTopPlus*, *block*, *above*, *altFixAlt*, *vfr*, *vfrPlus* may be included in the message.	ff:AltitudeType	Yes	**"xs:double"** uom:	**8000** *uom:* **FEET**	No
flight/assignedAltitude/block/above/@uom	assignedAlt_08d	This attribute specifies the unit of measure for the *assignedAltitude/block/above* element.	ff:AltitudeMeasureType	No	**"FEET|METRES"**	**FEET**	Yes
flight/assignedAltitude/block/below	assignedAlt_08d	The top level of the assigned block of altitudes for the flight to fly at. Only one of the altitude elements *simple*, *vfrOnTop*, *vfrOnTopPlus*, *block*, *above*, *altFixAlt*, *vfr*, *vfrPlus* may be included in the message.	ff:AltitudeType	Yes	**"xs:double"**	**14000** *uom:* **FEET**	No
flight/assignedAltitude/block/below/@uom	assignedAlt_08d	This attribute specifies the unit of measure for the *assignedAltitude/block/below* element.	ff:AltitudeMeasureType	No	**"FEET|METRES"**	**FEET**	Yes

DRAFT

Name [HZ_FIXM]	Name [HZ]	Definition	Type	Complex?	Format/Permissible Values	Example	Required?
flight/enRoute/position/altitude	reportedAlt_54aC	This element contains the reported Mode C altitude. It may only be specified if none of the other altitude elements (assignedAltitude, interimAltitude) is included in the message.	ff:AltitudeType	Yes	**xs:double**	**31000** **FEET** The aircraft reported altitude is 31,000 feet.	No
flight/enRoute/position/altitude/@uom	reportedAlt_54aC	This attribute specifies the altitude measure unit for the element *flight/enRoute/position/altitude*.	ff:AltitudeMeasureType	No	**"FEET|METRES"**	**FEET**	Yes
flight/enRoute/position/position/location/pos	trackPosition_23d	This element specifies the actual location of an active flight as reported by surveillance, for a flight tracked by radar, or from the position part of a pilot progress report, for an oceanic flight or a flight operating in a non-radar airspace.	*ff:GeographicalLocationType*	Yes	List of two **xs:double** : latitude followed by longitude: **"\d{6}[A-Z] \d{7}[A-Z]"** For latitude, the first two digits are degrees, the second two are minutes, and the last two are seconds. For the longitude, the first three digits are degrees, the second two are minutes, and the last two are seconds.	393106 0842535	Yes
flight/enRoute/position/position/location/@srsName	trackPosition_23d	This attribute specifies the name of the coordinate reference system (CRS) that defines the semantics of the lat/long pair *flight/enRoute/position/position/@pos* according to the ISO6709 standard. FIXM uses only "urn:ogc:def:crs:EPSG::4326".	xs:string	No	fixed=**"urn:ogc:def:crs:EPSG::4326"**	urn:ogc:def:crs:EPSG::4326	Yes

DRAFT

5.5.1.62 Beacon Code Reassignment [BA] – Data Elements

Element Name [BA]	Element Definition	Type	Complex?	Format/Permissible Values	Example	Required?
sourceId_00e	This element specifies the source identification that includes a UTC time followed by a four-digit sequence number.	string	No	**"\d{10}"** Ten digits, of which the first 6 digits represent the UTC time (*hhmmss*) and the last four digits, represent the message sequence number in the range [0000-9999].	**2359359001**, where the first 6 digits are the UTC time (23:59:35 UTC) and the last 4 digits are sequence number of the message (9001).	Yes
sourceTime_00e1	This element specifies the time component of the previous element, sourceId_00e.	string	No	**"[0-2]\d_[0-5]\d_[0-5]\d"** Time in the format *hh_mm_ss,* where: *hh* stands for the 2-digit-hour in the range 00-23, *mm* stands for the 2-digit minutes in the range 00-59, and *ss* stands for the 2-digit seconds in the range 00-59.	**23_59_35** that represents 23:59:35 UTC	Yes
sourceSeqNo_00e2	This element specifies the message sequence number component of the sourceId_00e element.	string	No	**"\d{4}"** Four-digit number in the range [0000-9999].	**9001**	Yes
flightId_02a	Aircraft ID, or flight ID (also called Call Sign).	string	No	**"\+?[A-Z][A-Z0-9]{1,6}"** One uppercase alphabetic character followed by one to six alphanumeric characters.	**AAL20**	Yes
computerId_02d	ERAM Computer Identification (Computer ID).	string	No	**"([0-9][A-HJ-NP-Z0-9]{2})| ([0-9]{2}[A-HJ-NP-Z0-9])"** The element includes a digit, followed by two alphanumeric characters with the exception of the letters **I** and **O**, as specified by the pattern above.	**020**	No
eramGufi_316a	GUFI that uniquely identifies each flight in the system.	string	No	**"[A-Z]{2}\d{5}[1-7]\d{2}"** This element includes 10 alphanumeric characters: -ICAO country code (one letter); -en-route facility ID (one letter); -time in seconds of current day (five digits in the range 00000-86400);	**KB5980017**	No

DRAFT

Element Name [BA]	Element Definition	Type	Complex?	Format/Permissible Values	Example	Required?
				-sequence number (two digits).		
sspId_167a	Site Specific Plan Identifier. It is assigned by IFPA to uniquely identify a flight plan in each ERAM facility.	string	No	**"\d{1,4}"** One to four digits.	**24**	No
beaconCode_04a	Beacon code.	string	No	**"[0-7]{4}"** The element includes four octal digits (i.e. 0-7). When the last two digits of the four digits are zero, the beacon code is a non-discrete code. A discrete code is any code not ending in 00.	Non-discrete VFR code: **2101**	Yes
departurePoint_26a	It is used to specify the point at which to start processing the flight plan route as follows: the departure airport or the airfile point.	string	No	**"([A-Z0-9]{2,5}) |** **([A-Z0-9]{2,5}\d{6}) |** **(\d{4}[A-Z]?/\d{4,5}[A-Z]?)"** Any of the standard ways to represent a fix can be used for this element (fix name, lat/long, or fix-radial-distance), including the standard airport designators.	**AB** **DFW** **KDFW** **SHP090015** **ATOKA300040** **3500N/04000W**	Yes
destination_27a	It is used to specify the point at which to end processing the flight plan route.	string	No	**"([A-Z0-9]{2,5}) |** **([A-Z0-9]{2,5}\d{6}) |** **(\d{4}[A-Z]?/\d{4,5}[A-Z]?)"** Any of the standard ways to represent a fix can be used for this element (fix name, lat/long, or fix-radial-distance), including the standard airport designators.	**AB** **DFW** **KDFW** **SHP090015** **ATOKA300040** **3500N/04000W**	Yes

DRAFT

5.5.1.63 Beacon Code Reassignment [BA] - Diagram

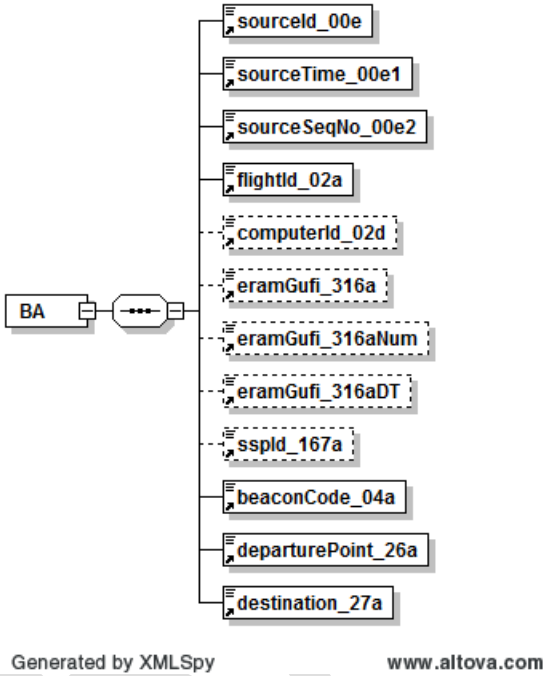

5.5.1.64 Beacon Code Reassignment Message in FIXM Format [BA_FIXM] – Data Elements

The following elements of the BA message in Simple XML format are not translated in the FIXM format of the message:

- sourceId_00e
- sourceTime_00e1
- sourceSeqNo_00e2
- eramGufi_316a

Name [BA_FIXM]	Name [BA]	Definition	Type	Complex?	Format/Permissible Values	Example	Required?
flight/supplementalData/additionalFlightInformation/nameValue/@name flight/supplementalData/additionalFlightInformation/nameValue/@value	FDPS_SequenceNo	Sequence number assigned by SFDPS to each message it receives from HADDS. The attribute *name* includes the constant string "MSG_SEQ_NO", and the attribute *value* contains the sequence number value.	@name: @value: fb:FreeTextType	No	@name: ”MSG_SEQ_NO” @value: xs:nonNegativeInteger xs:maxInclusive value="999999999"	@name="MSG_SEQ_NO" @value="6860416"	Yes
flight/operator/operatingOrganization/organization/@name	FDPS_FlightOperator/OPRIndicator_918f	Attribute used to specify the full official name of the State, Organization, Authority, aircraft operating agency, handling agency engaged in or offering to engage in aircraft operation.	ff:TextNameType	No	xs:string	UAL	No
flight/@system	propSourceSystem	This attribute indicates which SFDPS system generated the message.	fb:ProvenanceSystemType	No	xs:string maxLength=128	FDPS1	Yes
flight/@timestamp	propRcvdTime	This attribute conatins the time at which the message was received by SFDPS.	ff:TimeType	No	xs:dateTime	2015-12-18T22:19:02.028Z	Yes
flight/@centre	center	This attribute specifies the code of the ARTCC (or FIR) that produced the data.	fb:ProvenanceCentreType	No	xs:string	ZAU	Yes
flight/arrival/runwayPositionAndTime/runwayTime/[estimated|actual]/@time	arrivalTime	This attribute specifies the proposed or the actual time of arrival at destination, set according to the flight state.	ff:TimeType	No	xs:dateTime	2014-06-20T20:17:52	Yes
flight/departure/runwayPositionAndTime/runwayTime/[actual|estimated]/@time	departureTime	This element specifies the proposed or actual departure time, set according to the flight state.	ff:TimeType	No	xs:dateTime	2014-06-20T20:17:52	Yes

DRAFT

Name [BA_FIXM]	Name [BA]	Definition	Type	Complex?	Format/Permissible Values	Example	Required?
flight/flightStatus/@fdpsFlightStatus	flightState	This attribute contains the current status of the flight as specified by SFDPS.	nas:SfdpsFlightStatusType	Yes	xs:string "PROPOSED|ACTIVE|COMPLETED|CANCELLED|DROPPED"	ACTIVE	Yes
flight/supplementalData/additionalFlightInformation/nameValue/@name flight/supplementalData/additionalFlightInformation/nameValue/@value	fdpsGufi	The name value pair specifies the SFDPS GUFI, an identifier on every message that positively identifies what flight the message is for.	fb:FreeTextType	No	xs:string @name: "FDPS_GUFI" @value: "us\.fdps\.\d{4}-\d{2}-\d{2}T\d{2}:\d{2}:\d{2}Z\.[A-Za-z0-9/]+"	name="FDPS_GUFI" value="us.fdps.2015-12-18T16:59:10Z.000/14/100"/>	Yes
flight/flightPlan/@identifier	eramGufi_316aFPId	This attribute specifies the unique flight plan identifier.	fb:FreeTextType	No	xs:string "[A-Z]{2}\d{5}[1-7]\d{2}"	"KU68378100"	No
flight/gufi	uuidGufi	This element contains a reference that uniquely identifies a flight and that is independent of any particular system. This reference conforms to the Universal Unique Identifier standard.	fb:GloballyFlightIdentifierType		xs:string "[0-9a-fA-F]{8}\-[0-9a-fA-F]{4}\-4[0-9a-fA-F]{3}\-[89aAbB][0-9a-fA-F]{3}\-[0-9a-fA-F]{12}"	4aaf92be-ac0a-4dba-998f-9e56f5d450b6	Yes
flight/flightIdentification/@aircraftIdentification	flightId_02a	Name used by Air Traffic Services units to identify and communicate with an aircraft.	fb:FlightIdentifierType	No	**"[A-Z0-9]{7}"**	**AAL20**	Yes
flight/supplementalData/additionalFlightInformation/nameValue/@name flight/supplementalData/additionalFlightInformation/nameValue/@value		The flight supplemental data is used to indicate that a flight message is a test message, by setting the attribute *name* to "**SIMULATED_FLIGHT**" and the attribute *value* to "**true**".	*@name:* *@value*: fb:FreeTextType	No	*@name:* **"[A-Z0-9_]{1,20}"** *@value:* **xs:string** **minLength=1, maxLength=100** @name = **"SIMULATED_FLIGHT"**	@name = **"SIMULATED_FLIGHT"** @value = **"true"**	No

DRAFT

Name [BA_FIXM]	Name [BA]	Definition	Type	Complex?	Format/Permissible Values	Example	Required?
					@value = **"true"**		
flight/flightIdentification/@computerId	computerId_02d	A unique identification assigned by ERAM to each flight plan.	fb:FreeTextType	No	**"([0-9][A-HJ-NP-Z0-9]{2})| ([0-9]{2}[A-HJ-NP-Z0-9])"** The element includes a digit, followed by two alphanumeric characters with the exception of the letters **I** and **O**, such as *ddd, ddL, dLd, dLL*.	**020**	No
flight/flightIdentification/@siteSpecificPlanId	sspId_167a	Site Specific Plan Identifier. It is assigned by Instrument Flight Procedures Automation (IFPA) to uniquely identify a flight plan in each ERAM facility.	fb:CountType	No	**"\d{1,4}"** One to four-digits.	**24**	No
flight/enRoute/beaconCodeAssignment/currentBeaconCode	beaconCode_04a	Current assigned beacon code.	fb:BeaconCodeType	No	"[0-7]{4}" The element includes four octal digits (i.e. 0-7). When the last two digits of the four-digits are zero, the beacon code is a non-discrete code. A discrete code is any code not ending in 00.	Non-discrete VFR code: **2101**	No
flight/departure/@departurePoint	departurePoint_26a	It is used to specify the first point or other initial entity where the air traffic control/management system route starts.	fb:FreeTextType	No	xs:string minLength=2, maxLength=12 **"([A-Z0-9]{2,5}) | ([A-Z0-9]{2,5}\d{6}) | (\d{4}[A-Z]?/\d{4,5}[A-Z]?)"** Any of the standard ways to represent a fix can be used for this element (fix name, lat/long, or fix-radial-distance), including the standard airport designators.	**AB** **DFW** **KDFW** **SHP090015** **ATOKA300040** **3500N/04000W**	Yes
flight/arrival/@arrivalPoint	destination_27	The final point or other final entity where the air traffic	fb:FreeTextType	No	**xs:string**	**AB**	Yes

DRAFT

Name [BA_FIXM]	Name [BA]	Definition	Type	Complex?	Format/Permissible Values	Example	Required?
	a	control/management system route terminates.			minLength=2, maxLength=12 **"([A-Z0-9]{2,5}) | ([A-Z0-9]{2,5}\d{6}) | (\d{4}[A-Z]?/\d{4,5}[A-Z]?)"** Any of the standard ways to represent a fix can be used for this element (fix name, lat/long, or fix-radial-distance), including the standard airport designators.	**DFW** **KDFW** **SHP090015** **ATOKA300040** **3500N/04000W**	

5.5.1.65 Beacon Code Restricted [RE] – Data Elements

Element Name [RE]	Element Definition	Type	Complex?	Format/Permissible Values	Example	Required?
sourceId_00e	This element specifies the source identification that includes a UTC time followed by a four-digit sequence number.	string	No	**"\d{10}"** Ten digits, of which the first 6 digits represent the UTC time (*hhmmss*) and the last four digits, represent the message sequence number in the range [0000-9999].	**2359359001**, where the first 6 digits are the UTC time (23:59:35 UTC) and the last 4 digits are sequence number of the message (9001).	Yes
sourceTime_00e1	This element specifies the time component of the previous element, sourceId_00e.	string	No	**"[0-2]\d_[0-5]\d_[0-5]\d"** Time in the format *hh_mm_ss,* where: *hh* stands for the 2-digit-hour in the range 00-23, *mm* stands for the 2-digit minutes in the range 00-59, and *ss* stands for the 2-digit seconds in the range 00-59.	**23_59_35** that represents 23:59:35 UTC	Yes
sourceSeqNo_00e2	This element specifies the message sequence number component of the	string	No	**"\d{4}"** Four-digit number in the range [0000-	**9001**	Yes

Element Name [RE]	Element Definition	Type	Complex?	Format/Permissible Values	Example	Required?
	sourceId_00e element.			9999].		
flightId_02a	Aircraft ID, or flight ID (also called Call Sign).	string	No	**"\+?[A-Z][A-Z0-9]{1,6}"** One uppercase alphabetic character followed by one to six alphanumeric characters.	**AAL20**	Yes
computerId_02d	ERAM Computer Identification (Computer ID).	string	No	**"([0-9][A-HJ-NP-Z0-9]{2})|** **([0-9]{2}[A-HJ-NP-Z0-9])"** The element includes a digit, followed by two alphanumeric characters with the exception of the letters **I** and **O**, as specified by the pattern above.	**020**	No
eramGufi_316a	GUFI that uniquely identifies each flight in the system.	string	No	**"[A-Z]{2}\d{5}[1-7]\d{2}"** This element includes 10 alphanumeric characters: -ICAO country code (one letter); -en-route facility ID (one letter); -time in seconds of current day (five digits in the range 00000-86400); -sequence number (two digits).	**KB5980017**	No
sspId_167a	Site Specific Plan Identifier. It is assigned by IFPA to uniquely identify a flight plan in each ERAM facility.	string	No	**"\d{1,4}"** One to four digits.	**24**	No
beaconCode_04a	Beacon code.	string	No	**"[0-7]{4}"** The element includes four octal digits (i.e. 0-7). When the last two digits of the four digits are zero, the beacon code is a non-discrete code. A discrete code is any code not ending in 00.	Non-discrete VFR code: **2101**	Yes
departurePoint_26a	It is used to specify the point at which to start processing the flight plan route as follows: the departure airport or the airfile point.	string	No	**"([A-Z0-9]{2,5}) |** **([A-Z0-9]{2,5}\d{6}) |** **(\d{4}[A-Z]?/\d{4,5}[A-Z]?)"** Any of the standard ways to represent a fix can be used for this element (fix	**AB** **DFW** **KDFW** **SHP090015**	Yes

Element Name [RE]	Element Definition	Type	Complex?	Format/Permissible Values	Example	Required?
				name, lat/long, or fix-radial-distance), including the standard airport designators.	**ATOKA300040** **3500N/04000W**	
destination_27a	This element is used to specify the point at which to end processing the flight plan route.	string	No	**"([A-Z0-9]{2,5}) |** **([A-Z0-9]{2,5}\d{6}) |** **(\d{4}[A-Z]?/\d{4,5}[A-Z]?)"** Any of the standard ways to represent a fix can be used for this element (fix name, lat/long, or fix-radial-distance), including the standard airport designators.	**AB** **DFW** **KDFW** **SHP090015** **ATOKA300040** **3500N/04000W**	Yes
restrictedBeaconCode_04aR	This element is used to specify the restricted beacon code.	string	No	**"[0-7]{4}"** The element includes four octal digits (i.e. 0-7). When the last two digits of the four digits are zero, the beacon code is a non-discrete code. A discrete code is any code not ending in 00.	2101	Yes

DRAFT

5.5.1.66 Beacon Code Restricted [RE] - Diagram

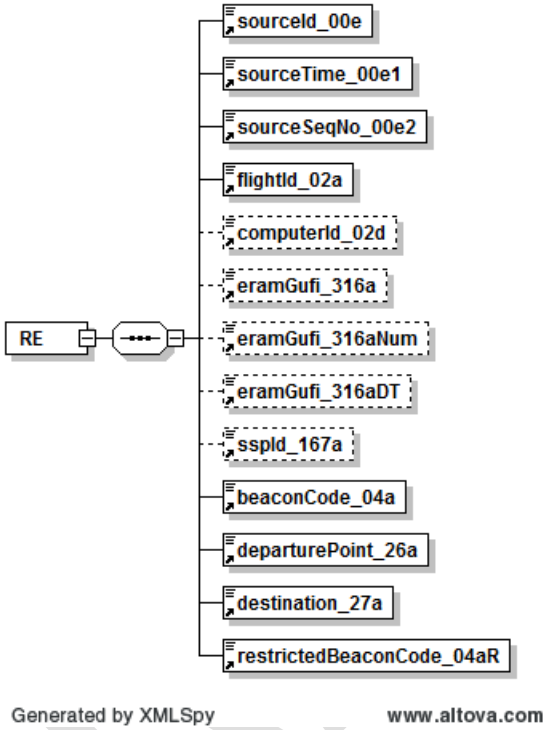

5.5.1.67 Beacon Code Restricted Message in FIXM Format [RE_FIXM] – Data Elements

The following elements of the RE message in Simple XML format are not translated in the FIXM format of the message:

- sourceId_00e
- sourceTime_00e1
- sourceSeqNo_00e2
- eramGufi_316a

Name [RE_FIXM]	Name [RE]	Definition	Type	Complex?	Format/Permissible Values	Example	Required?
flight/supplementalData/additionalFlightInformation/nameValue/@name flight/supplementalData/additionalFlightInformation/nameValue/@value	FDPS_SequenceNo	Sequence number assigned by SFDPS to each message it receives from HADDS. The attribute *name* includes the constant string "MSG_SEQ_NO", and the attribute *value* contains the sequence number value.	@name: @value: fb:FreeTextType	No	@name: ”MSG_SEQ_NO” @value: xs:nonNegativeInteger xs:maxInclusive value="999999999"	@name="MSG_SEQ_NO" @value="6860416"	Yes
flight/operator/operatingOrganization/organization/@name	FDPS_FlightOperator/OPRIndicator_918f	Attribute used to specify the full official name of the State, Organization, Authority, aircraft operating agency, handling agency engaged in or offering to engage in aircraft operation.	ff:TextNameType	No	xs:string	UAL	No
flight/@system	propSourceSystem	This attribute indicates which SFDPS system generated the message.	fb:ProvenanceSystemType	No	xs:string maxLength=128	FDPS1	Yes
flight/@timestamp	propRcvdTime	This attribute conatins the time at which the message was received by SFDPS.	ff:TimeType	No	xs:dateTime	2015-12-18T22:19:02.028Z	Yes
flight/@centre	center	This attribute specifies the code of the ARTCC (or FIR) that produced the data.	fb:ProvenanceCentreType	No	xs:string	ZAU	Yes
flight/arrival/runwayPositionAndTime/runwayTime/[estimated|actual]/@time	arrivalTime	This attribute specifies the proposed or the actual time of arrival at destination, set according to the flight state.	ff:TimeType	No	xs:dateTime	2014-06-20T20:17:52	Yes
flight/departure/runwayPositionAndTime/runwayTime/[actual|estimated]/@time	departureTime	This element specifies the proposed or actual departure time, set according to the flight state.	ff:TimeType	No	xs:dateTime	2014-06-20T20:17:52	Yes
flight/flightStatus/@fdpsFlightStatus	flightState	This attribute contains the current status of the flight as specified by SFDPS.	nas:SfdpsFlightStatusType	Yes	xs:string “PROPOSED|ACTIVE|COMPLETED|CANCELLED|DROPPED”	ACTIVE	Yes
flight/supplementalData	fdpsGufi	The name value pair specifies the SFDPS GUFI,	fb:FreeTextType	No	xs:string	name="FDPS_GUFI"	Yes

DRAFT

Name [RE_FIXM]	Name [RE]	Definition	Type	Complex?	Format/Permissible Values	Example	Required?
/additionalFlightInformation/nameValue/@name flight/supplementalData /additionalFlightInformation/nameValue/@value		an identifier on every message that positively identifies what flight the message is for.			@name: "FDPS_GUFI" @value: "us\.fdps\.\d{4}-\d{2}-\d{2}T\d{2}:\d{2}:\d{2}Z\.[A-Za-z0-9/]+"	value="us.fdps.2015-12-18T16:59:10Z.000/14/100"/>	
flight/flightPlan/@identifier	eramGufi_316aFPId	This attribute specifies the unique flight plan identifier.	fb:FreeTextType	No	xs:string "[A-Z]{2}\d{5}[1-7]\d{2}"	"KU68378100"	No
flight/gufi	uuidGufi	This element contains a reference that uniquely identifies a flight and that is independent of any particular system. This reference conforms to the Universal Unique Identifier standard.	fb:GloballyFlightIdentifierType		xs:string "[0-9a-fA-F]{8}\-[0-9a-fA-F]{4}\-4[0-9a-fA-F]{3}\-[89aAbB][0-9a-fA-F]{3}\-[0-9a-fA-F]{12}"	4aaf92be-ac0a-4dba-998f-9e56f5d450b6	Yes
flight/flightIdentification /@aircraftIdentification	flightId_02a	Name used by Air Traffic Services units to identify and communicate with an aircraft.	fb:FlightIdentifierType	No	**"[A-Z0-9]{7}"**	**AAL20**	Yes
flight/supplementalData /additionalFlightInformation/nameValue/@name flight/supplementalData /additionalFlightInformation/nameValue/@value	flightId_02a	The flight supplemental data is used to indicate that a flight message is a test message, by setting the attribute *name* to "**SIMULATED_FLIGHT**" and the attribute *value* to "**true**".	*@name:* *@value*: fb:FreeTextType	No	*@name:* **"[A-Z0-9_]{1,20}"** *@value:* **xs:string** **minLength=1, maxLength=100** @name = **"SIMULATED_FLIGHT"** @value = **"true"**	@name = **"SIMULATED_FLIGHT"** @value = **"true"**	No
flight/flightIdentification /@computerId	computerId_02d	A unique identification assigned by ERAM to each flight plan.	fb:FreeTextType	No	**"([0-9][A-HJ-NP-Z0-9]{2})| ([0-9]{2}[A-HJ-NP-Z0-9])"** The element includes a digit, followed by two alphanumeric characters with the exception of the letters **I** and **O**, such as *ddd, ddL, dLd, dLL*.	**020**	No
flight/flightIdentification /@siteSpecificPlanId	sspId_167a	Site Specific Plan Identifier. It is assigned by Instrument Flight Procedures Automation	fb:CountType	No	**"\d{1,4}"** One to four-digits.	**24**	No

DRAFT

Name [RE_FIXM]	Name [RE]	Definition	Type	Complex?	Format/Permissible Values	Example	Required?
		(IFPA) to uniquely identify a flight plan in each ERAM facility.					
flight/enRoute/beaconCodeAssignment/currentBeaconCode	beaconCode_04a	Current assigned beacon code.	fb:BeaconCodeType	No	"[0-7]{4}" The element includes four octal digits (i.e. 0-7). When the last two digits of the four-digits are zero, the beacon code is a non-discrete code. A discrete code is any code not ending in 00.	Non-discrete VFR code: **2101**	Yes
flight/departure/@departurePoint	departurePoint_26a	It is used to specify the first point or other initial entity where the air traffic control/management system route starts.	fb:FreeTextType	No	xs:string minLength=2, maxLength=12 **"([A-Z0-9]{2,5}) | ([A-Z0-9]{2,5}\d{6}) | (\d{4}[A-Z]?/\d{4,5}[A-Z]?)"** Any of the standard ways to represent a fix can be used for this element (fix name, lat/long, or fix-radial-distance), including the standard airport designators.	**AB** **DFW** **KDFW** **SHP090015** **ATOKA300040** **3500N/04000W**	Yes
flight/arrival/@arrivalPoint	destination_27a	The final point or other final entity where the air traffic control/management system route terminates.	fb:FreeTextType	No	**xs:string** minLength=2, maxLength=12 **"([A-Z0-9]{2,5}) | ([A-Z0-9]{2,5}\d{6}) | (\d{4}[A-Z]?/\d{4,5}[A-Z]?)"** Any of the standard ways to represent a fix can be used for this element (fix name, lat/long, or fix-radial-distance), including the standard airport designators.	**AB** **DFW** **KDFW** **SHP090015** **ATOKA300040** **3500N/04000W**	Yes
flight/enRoute/beaconCodeAssignment/previousBeaconCode	restrictedBeaconCode_04aR	The Secondary Surveillance Radar (SSR) mode and code the flight was transponding before the current SSR mode and code.	fb:BeaconCodeType	Yes	**"[0-7]{4}"** The element includes four octal digits (i.e. 0-7). When the last two digits of the four digits are zero, the beacon code is a non-discrete code. A discrete code is any code not	2101	Yes

DRAFT

Name [RE_FIXM]	Name [RE]	Definition	Type	Complex?	Format/Permissible Values	Example	Required?
					ending in 00.		

5.5.1.68 FDB Fourth Line Information [HF] – Data Elements

Element Name [HF]	Element Definition	Type	Complex?	Format/Permissible Values	Example	Required?
sourceId_00e	This element specifies the source identification that includes a UTC time followed by a four-digit sequence number.	string	No	**"\d{10}"** Ten digits, of which the first 6 digits represent the UTC time (*hhmmss*) and the last four digits, represent the message sequence number in the range [0000-9999].	**2359359001**, where the first 6 digits are the UTC time (23:59:35 UTC) and the last 4 digits are sequence number of the message (9001).	Yes
sourceTime_00e1	This element specifies the time component of the previous element, sourceId_00e.	string	No	**"[0-2]\d_[0-5]\d_[0-5]\d"** Time in the format *hh_mm_ss,* where: *hh* stands for the 2-digit-hour in the range 00-23, *mm* stands for the 2-digit minutes in the range 00-59, and *ss* stands for the 2-digit seconds in the range 00-59.	**23_59_35** that represents 23:59:35 UTC	Yes
sourceSeqNo_00e2	This element specifies the message sequence number component of the sourceId_00e element.	string	No	**"\d{4}"** Four-digit number in the range [0000-9999].	**9001**	Yes
flightId_02a	Aircraft ID, or flight ID (also called Call Sign).	string	No	**"\+?[A-Z][A-Z0-9]{1,6}"** One uppercase alphabetic character followed by one to six alphanumeric characters.	**AAL20**	Yes
computerId_02d	ERAM Computer Identification (Computer ID).	string	No	**"([0-9][A-HJ-NP-Z0-9]{2})| ([0-9]{2}[A-HJ-NP-Z0-9])"** The element includes a digit, followed by two alphanumeric characters with the exception of the letters **I** and **O.**	**020**	Yes

Element Name [HF]	Element Definition	Type	Complex?	Format/Permissible Values	Example	Required?
sspId_167a	Site Specific Plan Identifier. It is assigned by IFPA to uniquely identify a flight plan in each ERAM facility.	string	No	**"\d{1,4}"** One to four digits.	**24**	No
FDB4thLineHeading_155a	This element is used to display the heading of the aircraft issued by the controller. Its format is one to four alphanumeric characters. Samples: 075, H075.	string	No	**"[A-Z0-9]{1,4}"**	**075** **H075**	No
FDB4thLineSpeed_155b	This element is used to display the speed of the aircraft issued by the controller.	string	No	**"[A-Z0-9+-\.]{1,4}"** Minimum length = 1 character Maximum length = 4 characters.	280+ S260 M83+ .75-	No
FDB4thLineText_155c	This element is used to display free-form text issued by the controller.	string	No	**"[A-Z0-9+-=*/_;\.,\\|^v]{1,8}"** The allowed characters are the alphanumeric characters, −, +, =, *, /, underscore (_), semicolon (;), period (.), and comma (,). No leading or embedded spaces are allowed. It can be one to eight characters long.	-BUFFI NOBBL BLVNS	No

DRAFT

5.5.1.69 FDB Fourth Line Information [HF] - Diagram

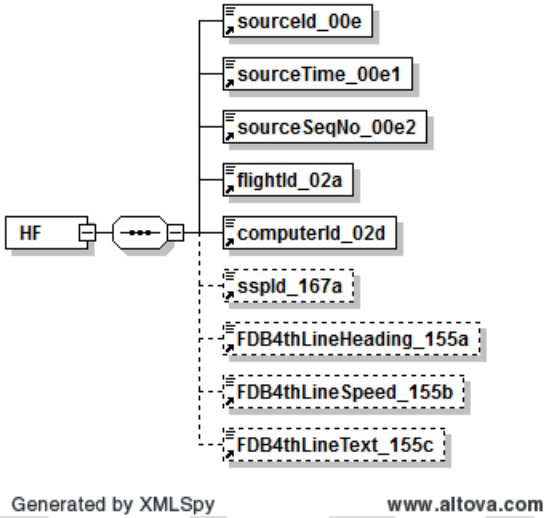

5.5.1.70 FDB Forth Line Message in FIXM Format [HF_FIXM] – Data Elements

The following elements of the HF message in Simple XML format are not translated in the FIXM format of the message:

- sourceId_00e
- sourceTime_00e1
- sourceSeqNo_00e2
- eramGufi_316a

Name [HF_FIXM]	Name [HF]	Definition	Type	Complex ?	Format/Permissible Values	Example	Required?
flight/supplemental Data/additionalFlight Information/nameValue/@name flight/supplemental Data/additionalFlight	FDPS_SequenceNo	Sequence number assigned by SFDPS to each message it receives from HADDS. The attribute *name* includes the constant string "MSG_SEQ_NO", and the attribute *value* contains the sequence number value.	@name: @value: fb:FreeTextType	No	@name: ”MSG_SEQ_NO” @value: xs:nonNegativeInteger xs:maxInclusive	@name="MSG_SEQ_NO" @value="6860416"	Yes

Name [HF_FIXM]	Name [HF]	Definition	Type	Complex ?	Format/Permissible Values	Example	Required?
Information/nameValue/@value					value="999999999"		
flight/departure/@departurePoint	FDPS_Origin/departurePoint_26a	Attribute used to specify the first point or other initial entity where the air traffic control/management system route starts.	fb:FreeTextType	No	xs:string minLength=2, maxLength=12 **"([A-Z0-9]{2,5}) | ([A-Z0-9]{2,5}\d{6}) | (\d{4}[A-Z]?/\d{4,5}[A-Z]?)"** Any of the standard ways to represent a fix can be used for this element (fix name, lat/long, or fix-radial-distance), including the standard airport designators.	**AB** **DFW** **KDFW** **SHP090015** **ATOKA300040** **3500N/04000W**	No
flight/arrival/@arrivalPoint	destination_27a	The final point or other final entity where the air traffic control/management system route terminates.	fb:FreeTextType	No	xs:string minLength=2, maxLength=12 **"([A-Z0-9]{2,5}) | ([A-Z0-9]{2,5}\d{6}) | (\d{4}[A-Z]?/\d{4,5}[A-Z]?)"** Any of the standard ways to represent a fix can be used for this element (fix name, lat/long, or fix-radial-distance), including the standard airport designators.	**AB** **DFW** **KDFW** **SHP090015** **ATOKA300040** **3500N/04000W**	No
flight/operator/operatingOrganization/organization/@name	FDPS_FlightOperator/OPRIndicator_918f	Attribute used to specify the full official name of the State, Organization, Authority, aircraft operating agency, handling agency engaged in or offering to engage in aircraft operation.	ff:TextNameType	No	xs:string	UAL	No
flight/@system	propSourceSystem	This attribute indicates which SFDPS system generated the message.	fb:ProvenanceSystemType	No	xs:string maxLength=128	FDPS1	Yes
flight/@timestamp	propRcvdTime	This attribute conatins the time at which the message was received by SFDPS.	ff:TimeType	No	xs:dateTime	2015-12-18T22:19:02.028Z	Yes
flight/@centre	center	This attribute specifies the code of the ARTCC (or	fb:ProvenanceCentreType	No	xs:string	ZAU	Yes

DRAFT

Name [HF_FIXM]	Name [HF]	Definition	Type	Complex ?	Format/Permissible Values	Example	Required?
		FIR) that produced the data.					
flight/arrival/runwayPositionAndTime/runwayTime/[estimated|actual]/@time	arrivalTime	This attribute specifies the proposed or the actual time of arrival at destination, set according to the flight state.	ff:TimeType	No	xs:dateTime	2014-06-20T20:17:52	Yes
flight/departure/runwayPositionAndTime/runwayTime/[actual|estimated]/@time	departureTime	This element specifies the proposed or actual departure time, set according to the flight state.	ff:TimeType	No	xs:dateTime	2014-06-20T20:17:52	Yes
flight/flightStatus/@fdpsFlightStatus	flightState	This attribute contains the current status of the flight as specified by SFDPS.	nas:SfdpsFlightStatusType	Yes	xs:string “PROPOSED|ACTIVE|COMPLETED|CANCELLED|DROPPED”	ACTIVE	Yes
flight/supplementalData/additionalFlightInformation/nameValue/@name flight/supplementalData/additionalFlightInformation/nameValue/@value	fdpsGufi	The name value pair specifies the SFDPS GUFI, an identifier on every message that positively identifies what flight the message is for.	fb:FreeTextType	No	xs:string @name: "FDPS_GUFI" @value: "us\.fdps\.\d{4}-\d{2}-\d{2}T\d{2}:\d{2}:\d{2}Z\.[A-Za-z0-9/]+"	name="FDPS_GUFI" value="us.fdps.2015-12-18T16:59:10Z.000/14/100"/>	Yes
flight/flightPlan/@identifier	eramGufi_316aFPId	This attribute specifies the unique flight plan identifier.	fb:FreeTextType	No	xs:string "[A-Z]{2}\d{5}[1-7]\d{2}"	"KU68378100"	No
flight/gufi	uuidGufi	This element contains a reference that uniquely identifies a flight and that is independent of any particular system. This reference conforms to the Universal Unique Identifier standard.	fb:GloballyFlightIdentifierType		xs:string "[0-9a-fA-F]{8}\-[0-9a-fA-F]{4}\-4[0-9a-fA-F]{3}\-[89aAbB][0-9a-fA-F]{3}\-[0-9a-fA-F]{12}"	4aaf92be-ac0a-4dba-998f-9e56f5d450b6	Yes
flight/flightIdentifica	flightId_02a	Name used by Air Traffic Services units to	fb:FlightIdentifi	No	**"[A-Z0-9]{7}"**	**AAL20**	Yes

DRAFT

Name [HF_FIXM]	Name [HF]	Definition	Type	Complex ?	Format/Permissible Values	Example	Required?
tion/@aircraftIdentification		identify and communicate with an aircraft.	erType				
flight/supplementalData/additionalFlightInformation/nameValue/@name flight/supplementalData/additionalFlightInformation/nameValue/@value		The flight supplemental data is used to indicate that a flight message is a test message, by setting the attribute *name* to "**SIMULATED_FLIGHT**" and the attribute *value* to "**true**".	*@name:* *@value*: fb:FreeTextType	No	*@name:* **"[A-Z0-9_]{1,20}"** *@value:* **xs:string minLength=1, maxLength=100** @name = **"SIMULATED_FLIGHT"** @value = **"true"**	@name = **"SIMULATED_FLIGHT"** @value = **"true"**	No
flight/flightIdentification/@computerId	computerId_02d	A unique identification assigned by ERAM to each flight plan.	fb:FreeTextType	No	**"([0-9][A-HJ-NP-Z0-9]{2})| ([0-9]{2}[A-HJ-NP-Z0-9])"** The element includes a digit, followed by two alphanumeric characters with the exception of the letters **I** and **O**, such as *ddd, ddL, dLd, dLL*.	**020**	No
flight/flightIdentification/@siteSpecificPlanId	sspId_167a	Site Specific Plan Identifier. It is assigned by Instrument Flight Procedures Automation (IFPA) to uniquely identify a flight plan in each ERAM facility.	fb:CountType	No	**"\d{1,4}"** One to four-digits.	**24**	No
flight/enRoute/cleared/@clearanceHeading	FDB4thLineHeading_155a	This element contains the En-Route Controller Clearance heading as entered by the controller in the fourth line in Full Data Block.	fb:FreeTextType	No	**"[A-Z0-9]{1,4}"**	**075** **H075**	No
flight/enRoute/cleared/@clearanceSpeed	FDB4thLineSpeed_155b	This element contains the En-Route Controller Clearance speed as entered by the controller in the fourth line in Full Data Block.	fb:FreeTextType	No	**"[A-Z0-9+-\.]{1,4}"**	280+ S260 M83+ .75-	No
flight/enRoute/cleared/@clearanceText	FDB4thLineText_155c	This element contains the free-from text as entered by the En-Route Controller, to be associated with the Clearance in the fourth line in Full Data Block.	fb:FreeTextType	No	**"[A-Z0-9+-=*/_;\.,\\\|^v]{1,8}"**	-BUFFI NOBBL BLVNS	No

DRAFT

5.5.1.71 Point Out Information [HT] – Data Elements

Element Name [HT]	Element Definition	Type	Complex?	Format/Permissible Values	Example	Required?
sourceId_00e	This element specifies the source identification that includes a UTC time followed by a four-digit sequence number.	string	No	**"\d{10}"** Ten digits, of which the first 6 digits represent the UTC time (*hhmmss*) and the last four digits, represent the message sequence number in the range [0000-9999].	**2359359001**, where the first 6 digits are the UTC time (23:59:35 UTC) and the last 4 digits are sequence number of the message (9001).	Yes
sourceTime_00e1	This element specifies the time component of the previous element, sourceId_00e.	string	No	**"[0-2]\d_[0-5]\d_[0-5]\d"** Time in the format *hh_mm_ss,* where: *hh* stands for the 2-digit-hour in the range 00-23, *mm* stands for the 2-digit minutes in the range 00-59, and *ss* stands for the 2-digit seconds in the range 00-59.	**23_59_35** that represents 23:59:35 UTC	Yes
sourceSeqNo_00e2	This element specifies the message sequence number component of the sourceId_00e element.	string	No	**"\d{4}"** Four-digit number in the range [0000-9999].	**9001**	Yes
flightId_02a	Aircraft ID, or flight ID (also called Call Sign).	string	No	**"\+?[A-Z][A-Z0-9]{1,6}"** One uppercase alphabetic character followed by one to six alphanumeric characters.	**AAL20**	Yes
computerId_02d	ERAM Computer Identification (Computer ID).	string	No	**"([0-9][A-HJ-NP-Z0-9]{2})|** **([0-9]{2}[A-HJ-NP-Z0-9])"** The element includes a digit, followed by two alphanumeric characters with the exception of the letters **I** and **O.**	**020**	Yes
sspId_167a	Site Specific Plan Identifier. It is assigned by IFPA to uniquely identify a flight plan in each ERAM facility.	string	No	**"\d{1,4}"** One to four digits.	**24**	No

DRAFT

Element Name [HT]	Element Definition	Type	Complex?	Format/Permissible Values	Example	Required?
sourceSectorRouting_134b	This element contains the entering sector number for a Point Out action *HT* message for ATM-IPOP.	string	No	**"\d{2}"** Two digits in the range 00 – 99.	**50**	Yes
targetSector_16g	This element contains an adjacent center sector number for that center or an internal ERAM sector number.	string	No	**"[A-Z]?[0-9]{2}"** The format is an optional letter to specify the center, followed by two digits to specify the sector.	M45 80	Yes

5.5.1.72 Point Out Information [HT] - Diagram

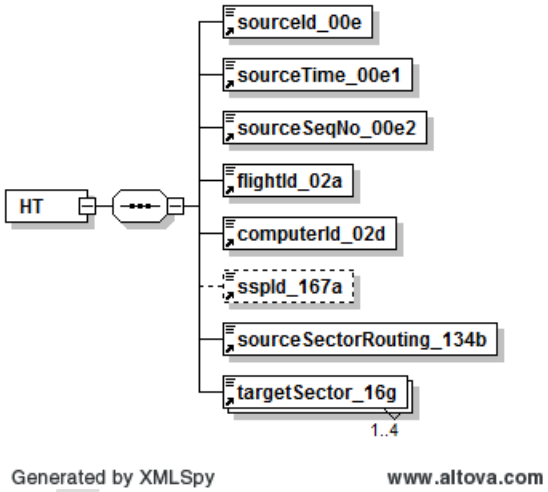

5.5.1.73 Point Out Information Message in FIXM Format [HT_FIXM] – Data Elements

The following elements of the HT message in Simple XML format are not translated in the FIXM format of the message:

- sourceId_00e
- sourceTime_00e1
- sourceSeqNo_00e2

Name [HT_FIXM]	Name [HT]	Definition	Type	Complex?	Format/Permissible Values	Example	Required?
flight/supplementalData/additionalFlightInformation/nameValue/@name flight/supplementalData/additionalFlightInformation/nameValue/@value	FDPS_SequenceNo	Sequence number assigned by SFDPS to each message it receives from HADDS. The attribute name includes the constant string "MSG_SEQ_NO", and the attribute value contains the sequence number value.	@name: @value: fb:FreeTextType	No	@name: ”MSG_SEQ_NO” @value: xs:nonNegativeInteger xs:maxInclusive value="999999999"	@name="MSG_SEQ_NO" @value="6860416"	Yes
flight/departure/@departurePoint	FDPS_Origin/departurePoint_26a	Attribute used to specify the first point or other initial entity where the air traffic control/management system route starts.	fb:FreeTextType	No	xs:string minLength=2, maxLength=12 "([A-Z0-9]{2,5}) | ([A-Z0-9]{2,5}\d{6}) | (\d{4}[A-Z]?/\d{4,5}[A-Z]?)” Any of the standard ways to represent a fix can be used for this element (fix name, lat/long, or fix-radial-distance), including the standard airport designators.	AB DFW KDFW SHP090015 ATOKA300040 3500N/04000W	No
flight/arrival/@arrivalPoint	FDPS_DestId/destination_27a	The final point or other final entity where the air traffic control/management system route terminates.	fb:FreeTextType	No	xs:string minLength=2, maxLength=12 "([A-Z0-9]{2,5}) | ([A-Z0-9]{2,5}\d{6}) | (\d{4}[A-Z]?/\d{4,5}[A-Z]?)” Any of the standard ways to represent a fix can be used for this element (fix name, lat/long, or fix-radial-distance), including the standard airport designators.	AB DFW KDFW SHP090015 ATOKA300040 3500N/04000W	No
flight/operator/operatingOrganization/organization/@name	FDPS_FlightOperator/OPRIndicator	Attribute used to specify the full official name of the State, Organization, Authority, aircraft operating agency,	ff:TextNameType	No	xs:string	UAL	No

DRAFT

Name [HT_FIXM]	Name [HT]	Definition	Type	Complex?	Format/Permissible Values	Example	Required?
	_918f	handling agency engaged in or offering uto engage in aircraft operation.					
flight/@system	propSourceSystem	This attribute indicates which SFDPS system generated the message.	fb:ProvenanceSystemType	No	xs:string maxLength=128	FDPS1	Yes
flight/@timestamp	propRcvdTime	This attribute conatins the time at which the message was received by SFDPS.	ff:TimeType	No	xs:dateTime	2015-12-18T22:19:02.028Z	Yes
flight/@centre	center	This attribute specifies the code of the ARTCC (or FIR) that produced the data.	fb:ProvenanceCentreType	No	xs:string	ZAU	Yes
flight/arrival/runwayPositionAndTime/runwayTime/[estimated|actual]/@time	arrivalTime	This attribute specifies the proposed or the actual time of arrival at destination, set according to the flight state.	ff:TimeType	No	xs:dateTime	2014-06-20T20:17:52	Yes
flight/departure/runwayPositionAndTime/runwayTime/[actual|estimated]/@time	departureTime	This element specifies the proposed or actual departure time, set according to the flight state.	ff:TimeType	No	xs:dateTime	2014-06-20T20:17:52	Yes
flight/flightStatus/@fdpsFlightStatus	flightState	This attribute contains the current status of the flight as specified by SFDPS.	nas:SfdpsFlightStatusType	Yes	xs:string “PROPOSED|ACTIVE|COMPLETED|CANCELLED|DROPPED”	ACTIVE	Yes
flight/supplementalData/additionalFlightInformation/nameValue/@name flight/supplementalData/additionalFlightInformation/nameValue/@value	fdpsGufi	The name value pair specifies the SFDPS GUFI, an identifier on every message that positively identifies what flight the message is for.	fb:FreeTextType	No	xs:string @name: "FDPS_GUFI" @value: "us\.fdps\.\d{4}-\d{2}-\d{2}T\d{2}:\d{2}:\d{2}Z\.[A-Za-z0-9/]+"	name="FDPS_GUFI" value="us.fdps.2015-12-18T16:59:10Z.000/14/100"/>	Yes
flight/flightPlan/@identifier	eramGufi_316aFPId	This attribute specifies the unique flight plan identifier.	fb:FreeTextType	No	xs:string "[A-Z]{2}\d{5}[1-7]\d{2}"	"KU68378100"	No

DRAFT

Name [HT_FIXM]	Name [HT]	Definition	Type	Complex?	Format/Permissible Values	Example	Required?
flight/gufi	uuidGufi	This element contains a reference that uniquely identifies a flight and that is independent of any particular system. This reference conforms to the Universal Unique Identifier standard.	fb:GloballyFlightIdentifierType		xs:string "[0-9a-fA-F]{8}\-[0-9a-fA-F]{4}\-4[0-9a-fA-F]{3}\-[89aAbB][0-9a-fA-F]{3}\-[0-9a-fA-F]{12}"	4aaf92be-ac0a-4dba-998f-9e56f5d450b6	Yes
flight/flightIdentification/@aircraftIdentification	flightId_02a	Name used by Air Traffic Services units to identify and communicate with an aircraft.	fb:FlightIdentifierType	No	"[A-Z0-9]{7}"	AAL20	Yes
flight/supplementalData/additionalFlightInformation/nameValue/@name flight/supplementalData/additionalFlightInformation/nameValue/@value	flightId_02a	The flight supplemental data is used to indicate that a flight message is a test message, by setting the attribute *name* to "**SIMULATED_FLIGHT**" and the attribute *value* to "**true**".	*@name:* *@value*: *fb:FreeTextType*	No	*@name:* **"[A-Z0-9_]{1,20}"** *@value:* **xs:string** **minLength=1, maxLength=100** @name = **"SIMULATED_FLIGHT"** @value = **"true"**	@name = **"SIMULATED_FLIGHT"** @value = **"true"**	No
flight/flightIdentification/@computerId	computerId_02d	A unique identification assigned by ERAM to each flight plan.	fb:FreeTextType	No	"([0-9][A-HJ-NP-Z0-9]{2})| ([0-9]{2}[A-HJ-NP-Z0-9])" The element includes a digit, followed by two alphanumeric characters with the exception of the letters I and O, such as ddd, ddL, dLd, dLL.	020	No
flight/flightIdentification/@siteSpecificPlanId	sspId_167a	Site Specific Plan Identifier. It is assigned by Instrument Flight Procedures Automation (IFPA) to uniquely identify a flight plan in each ERAM facility.	fb:CountType	No	"\d{1,4}" One to four-digits.	24	No
flight/enRoute/pointout/originatingUnit/@unitIdentifier	sourceSectorRouting_134b	This element contains the identifier of the Air Traffic Control unit originating the Point Out.	ff:AtcUnitNameType	No	"([A-Z]{4})|([A-Za-z0-9]{1, })"	ZCH	No
flight/enRoute/pointout/originatingUnit/@sectorIdentifi	sourceSectorRouting_13	This element contains the entering sector number for a Point Out action.	fb:FreeStringType	No	"\d[A-Z0-9]" The format is one digit followed by	1W	No

Name [HT_FIXM]	Name [HT]	Definition	Type	Complex?	Format/Permissible Values	Example	Required?
er	4b				one alphanumeric.		
flight/enRoute/pointout/receivingUnit/@unitIdentifier	targetSector_16g	This element contains an adjacent center sector number for that center or an internal ERAM sector number.	ff:AtcUnitNameType	No	"([A-Z]{4})|([A-Za-z0-9]{1, })"	ZCH	No
flight/enRoute/pointout/receivingUnit/@sectorIdentifier	targetSector_16g	This element contains the sector number of an adjacent sector receiving the point out.	fb:FreeStringType	No	"\d[A-Z0-9]"	1W	No

5.5.1.74 Inbound Point Out Information [PT] – Data Elements

Element Name [PT]	Element Definition	Type	Complex?	Format/Permissible Values	Example	Required?
sourceId_00e	This element specifies the source identification that includes a UTC time followed by a four-digit sequence number.	string	No	**"\d{10}"** Ten digits, of which the first 6 digits represent the UTC time (*hhmmss*) and the last four digits, represent the message sequence number in the range [0000-9999].	**2359359001**, where the first 6 digits are the UTC time (23:59:35 UTC) and the last 4 digits are sequence number of the message (9001).	Yes
sourceTime_00e1	This element specifies the time component of the previous element, sourceId_00e.	string	No	**"[0-2]\d_[0-5]\d_[0-5]\d"** Time in the format *hh_mm_ss,* where: *hh* stands for the 2-digit-hour in the range 00-23, *mm* stands for the 2-digit minutes in the range 00-59, and *ss* stands for the 2-digit seconds in the range 00-59.	**23_59_35** that represents 23:59:35 UTC	Yes
sourceSeqNo_00e2	This element specifies the message sequence number component of the sourceId_00e element.	string	No	**"\d{4}"** Four-digit number in the range [0000-9999].	**9001**	Yes

Element Name [PT]	Element Definition	Type	Complex?	Format/Permissible Values	Example	Required?
flightId_02a	Aircraft ID, or flight ID (also called Call Sign).	string	No	**"\+?[A-Z][A-Z0-9]{1,6}"** One uppercase alphabetic character followed by one to six alphanumeric characters.	**AAL20**	Yes
computerId_02d	ERAM Computer Identification (Computer ID).	string	No	**"([0-9][A-HJ-NP-Z0-9]{2})|** **([0-9]{2}[A-HJ-NP-Z0-9])"** The element includes a digit, followed by two alphanumeric characters with the exception of the letters **I** and **O.**	**020**	Yes
sspId_167a	Site Specific Plan Identifier. It is assigned by IFPA to uniquely identify a flight plan in each ERAM facility.	string	No	**"\d{1,4}"** One to four digits.	**24**	No
controllingFacility_138a	This element contains the facility that is controlling the flight.	string	No	**"[A-Z]{3}"** The format consists of three letters. Value is three blank characters if identification of the controlling facility is not available.	ZCH	Yes
controllingSector_138b	This element contains the controlling ARTS position or the controlling ERAM ARTCC sector number. The Controlling Sector is the sector/position that is controlling the flight. The value is 00 if identification of the controlling sector is not available.	string	No	**"\d[A-Z0-9]"** The format is one digit followed by one alphanumeric.	1W	Yes
receivingFacility_139a	This element contains the facility that is receiving the flight.	string	No	**"[A-Z]{3}"** The format is three letters. Value is three blank characters if identification of the controlling facility is not available.	AIA	Yes
receivingSector_139b	This element contains the receiving ERAM ARTCC sector number in the *PT* message. The receiving sector is the sector/position that is receiving	string	No	**"[0-9]{2}"** The format consists of two digits.	74	Yes

DRAFT

Element Name [PT]	Element Definition	Type	Complex?	Format/Permissible Values	Example	Required?
	the flight. The value is 00 if identification of the receiving sector is not available. *Note*: When used in the TH or OH messages, this element contains the receiving ERAM ARTCC sector number, or the ARTS IIII Receiving Position.					

5.5.1.75 Inbound Point Out Information [PT] - Diagram

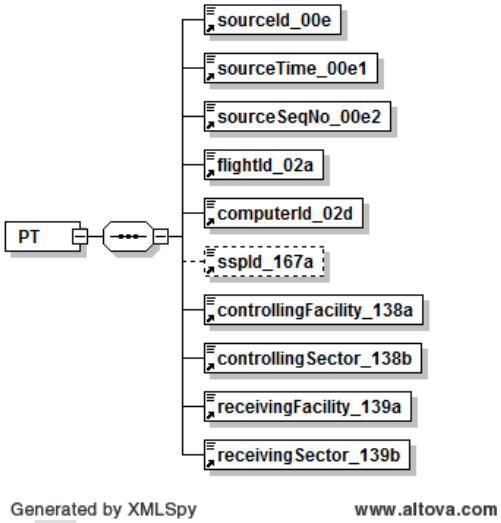

5.5.1.76 Inbound Point Out Information Message in FIXM [PT_FIXM] – Data Elements

The following elements of the PT message in Simple XML format are not translated in the FIXM format of the message:

- sourceId_00e

- sourceTime_00e1
- sourceSeqNo_00e2

Name [PT_FIXM]	Name [PT]	Element Definition	Type	Complex?	Format/Permissible Values	Example	Required?
flight/supplementalData/additionalFlightInformation/nameValue/@name flight/supplementalData/additionalFlightInformation/nameValue/@value	FDPS_SequenceNo	Sequence number assigned by SFDPS to each message it receives from HADDS. The attribute *name* includes the constant string "MSG_SEQ_NO", and the attribute *value* contains the sequence number value.	@name: @value: fb:FreeTextType	No	@name: ”MSG_SEQ_NO” @value: xs:nonNegativeInteger xs:maxInclusive value="999999999"	@name="MSG_SEQ_NO" @value="6860416"	Yes
flight/departure/@departurePoint	FDPS_Origin/departurePoint_26a	Attribute used to specify the first point or other initial entity where the air traffic control/management system route starts.	fb:FreeTextType	No	xs:string minLength=2, maxLength=12 **"([A-Z0-9]{2,5}) | ([A-Z0-9]{2,5}\d{6}) | (\d{4}[A-Z]?/\d{4,5}[A-Z]?)”** Any of the standard ways to represent a fix can be used for this element (fix name, lat/long, or fix-radial-distance), including the standard airport designators.	**AB** **DFW** **KDFW** **SHP090015** **ATOKA300040** **3500N/04000W**	No
flight/arrival/@arrivalPoint	FDPS_DestId/destination_27a	The final point or other final entity where the air traffic control/management system route terminates.	fb:FreeTextType	No	xs:string minLength=2, maxLength=12 **"([A-Z0-9]{2,5}) | ([A-Z0-9]{2,5}\d{6}) | (\d{4}[A-**	**AB** **DFW** **KDFW** **SHP090015** **ATOKA300040** **3500N/04000W**	No

DRAFT

Name [PT_FIXM]	Name [PT]	Element Definition	Type	Complex?	Format/Permissible Values	Example	Required?
					Z]?/\d{4,5}[A-Z]?)" Any of the standard ways to represent a fix can be used for this element (fix name, lat/long, or fix-radial-distance), including the standard airport designators.		
flight/operator/operatingOrganization/organization/@name	FDPS_FlightOperator/OPRIndicator_918f	Attribute used to specify the full official name of the State, Organization, Authority, aircraft operating agency, handling agency engaged in or offering to engage in aircraft operation.	ff:TextNameType	No	xs:string	UAL	No
flight/@system	propSourceSystem	This attribute indicates which SFDPS system generated the message.	fb:ProvenanceSystemType	No	xs:string maxLength=128	FDPS1	Yes
flight/@timestamp	propRcvdTime	This attribute conatins the time at which the message was received by SFDPS.	ff:TimeType	No	xs:dateTime	2015-12-18T22:19:02.028Z	Yes
flight/@centre	center	This attribute specifies the code of the ARTCC (or FIR) that produced the data.	fb:ProvenanceCentreType	No	xs:string	ZAU	Yes
flight/arrival/runwayPositionAndTime/runwayTime/[estimated|actual]/@time	arrivalTime	This attribute specifies the proposed or the actual time of arrival at destination, set according to the flight state.	ff:TimeType	No	xs:dateTime	2014-06-20T20:17:52	Yes
flight/departure/runwayPositionAndTime/runwayTime/[actual|estimated]/@time	departureTime	This element specifies the proposed or actual departure time, set according to the	ff:TimeType	No	xs:dateTime	2014-06-20T20:17:52	Yes

DRAFT

Name [PT_FIXM]	Name [PT]	Element Definition	Type	Complex?	Format/Permissible Values	Example	Required?
		flight state.					
flight/flightStatus/@fdpsFlightStatus	flightState	This attribute contains the current status of the flight as specified by SFDPS.	nas:SfdpsFlightStatusType	Yes	xs:string "PROPOSED|ACTIVE|COMPLETED|CANCELLED|DROPPED"	ACTIVE	Yes
flight/supplementalData/additionalFlightInformation/nameValue/@name flight/supplementalData/additionalFlightInformation/nameValue/@value	fdpsGufi	The name value pair specifies the SFDPS GUFI, an identifier on every message that positively identifies what flight the message is for.	fb:FreeTextType	No	xs:string @name: "FDPS_GUFI" @value: "us\.fdps\.\d{4}-\d{2}-\d{2}T\d{2}:\d{2}:\d{2}Z\.[A-Za-z0-9/]+"	name="FDPS_GUFI" value="us.fdps.2015-12-18T16:59:10Z.000/14/100"/>	Yes
flight/flightPlan/@identifier	eramGufi_316aFPId	This attribute specifies the unique flight plan identifier.	fb:FreeTextType	No	xs:string "[A-Z]{2}\d{5}[1-7]\d{2}"	"KU68378100"	No
flight/gufi	uuidGufi	This element contains a reference that uniquely identifies a flight and that is independent of any particular system. This reference conforms to the Universal Unique Identifier standard.	fb:GloballyFlightIdentifierType		xs:string "[0-9a-fA-F]{8}\-[0-9a-fA-F]{4}\-4[0-9a-fA-F]{3}\-[89aAbB][0-9a-fA-F]{3}\-[0-9a-fA-F]{12}"	4aaf92be-ac0a-4dba-998f-9e56f5d450b6	Yes
flight/flightIdentification/@aircraftIdentification	flightId_02a	Name used by Air Traffic Services units to identify and communicate with an aircraft.	fb:FlightIdentifierType	No	**"[A-Z0-9]{7}"**	**AAL20**	Yes
flight/supplementalData/additionalFlightInformation/nameValue/@name flight/supplementalData/additionalFlightInformation/nameValue		The flight supplemental data is used to indicate that a flight message is a test message, by setting the attribute *name* to "**SIMULATED_FLIGHT**" and the	*@name:* *@value*: fb:FreeTextType	No	*@name:* **"[A-Z0-9_]{1,20}"** *@value:* **xs:string**	@name = **"SIMULATED_FLIGHT"** @value = **"true"**	No

Name [PT_FIXM]	Name [PT]	Element Definition	Type	Complex?	Format/Permissible Values	Example	Required?
/@value		attribute *value* to "**true**".			**minLength=1, maxLength=100** @name = **"SIMULATED_FLIGHT"** @value = **"true"**		
flight/flightIdentification/@computerId	computerId_02d	A unique identification assigned by ERAM to each flight plan.	fb:FreeTextType	No	**"([0-9][A-HJ-NP-Z0-9]{2})| ([0-9]{2}[A-HJ-NP-Z0-9])"** The element includes a digit, followed by two alphanumeric characters with the exception of the letters **I** and **O**, such as *ddd, ddL, dLd, dLL*.	**020**	No
flight/flightIdentification/@siteSpecificPlanId	sspId_167a	Site Specific Plan Identifier. It is assigned by Instrument Flight Procedures Automation (IFPA) to uniquely identify a flight plan in each ERAM facility.	fb:CountType	No	**"\d{1,4}"** One to four-digits.	**24**	No
flight/controllingUnit/@unitIdentifier	controllingFacility_138a	This element specifies the identifier of the Air Traffic Control unit in control of the aircraft.	ff:AtcUnitNameType	No	**"([A-Z]{4})|([A-Za-z0-9]{1, })"**	ZCH	No
flight/controllingUnit/@sectorIdentifier	controllingSector_138b	This element specifies sector number of the Air Traffic Control sector in control of the aircraft.	fb:FreeStringType	No	**"\d[A-Z0-9]"** The format is one digit followed by one alphanumeric.	1W	No
flight/enRoute/boundaryCrossings/handoff/receivingUnit/@unitI	receivingFacility_139a	This element specifies the Air Traffic Control unit receiving	ff:AtcUnitNameType	No	**"([A-Z]{4})|([A-Za-z0-9]{*1,* })"**	AIA	No

Name [PT_FIXM]	Name [PT]	Element Definition	Type	Complex?	Format/Permissible Values	Example	Required?
dentifier		control of the aircraft as a result of a handoff.					
flight/enRoute/boundaryCrossings/handoff/receivingUnit/@sectorIdentifier	receivingSector_139b	This element specifies the ATC sector receiving control of the aircraft as a result of a handoff.	fb:FreeStringType	No	**"[0-9][A-Z0-9]"** The format is one digit followed by one alphanumeric.	1W	No

5.5.1.77 Handoff Status [OH] – Data Elements

Element Name [OH]	Element Definition	Type	Complex?	Format/Permissible Values	Example	Required?
sourceId_00e	This element specifies the source identification that includes a UTC time followed by a four-digit sequence number.	string	No	**"\d{10}"** Ten digits, of which the first 6 digits represent the UTC time (*hhmmss*) and the last four digits, represent the message sequence number in the range [0000-9999].	**2359359001**, where the first 6 digits are the UTC time (23:59:35 UTC) and the last 4 digits are sequence number of the message (9001).	Yes
sourceTime_00e1	This element specifies the time component of the previous element, sourceId_00e.	string	No	**"[0-2]\d_[0-5]\d_[0-5]\d"** Time in the format *hh_mm_ss,* where: *hh* stands for the 2-digit-hour in the range 00-23, *mm* stands for the 2-digit minutes in the range 00-59, and *ss* stands for the 2-digit seconds in the range 00-59.	**23_59_35** that represents 23:59:35 UTC	Yes
sourceSeqNo_00e2	This element specifies the message sequence number component of the sourceId_00e element.	string	No	**"\d{4}"** Four-digit number in the range [0000-9999].	**9001**	Yes
flightId_02a	Aircraft ID, or flight ID (also called Call Sign).	string	No	**"\+?[A-Z][A-Z0-9]{1,6}"** One uppercase alphabetic character	**AAL20**	Yes

Element Name [OH]	Element Definition	Type	Complex?	Format/Permissible Values	Example	Required?
				followed by one to six alphanumeric characters.		
computerId_02d	ERAM Computer Identification (Computer ID).	string	No	**"([0-9][A-HJ-NP-Z0-9]{2})| ([0-9]{2}[A-HJ-NP-Z0-9])"** The element includes a digit, followed by two alphanumeric characters with the exception of the letters **I** and **O** , as specified by the pattern above.	**020**	Yes
sspId_167a	Site Specific Plan Identifier. It is assigned by IFPA to uniquely identify a flight plan in each ERAM facility.	string	No	**"\d{1,4}"** One to four digits.	**24**	No
controllingFacility_138a	This element contains the facility that is controlling the flight.	string	No	**"[A-Z]{3}"** The format consists of three letters. Value is three blank characters if identification of the controlling facility is not available.	ZCH	No
controllingSector_138b	This element contains the controlling ARTS position or the controlling ERAM ARTCC sector number. The Controlling Sector is the sector/position that is controlling the flight. The value is 00 if identification of the controlling sector is not available.	string	No	**"\d[A-Z0-9]"** The format is one digit followed by one alphanumeric.	1W	Yes
receivingFacility_139a	This element contains the facility that is receiving the flight.	string	No	**"[A-Z]{3}"** The format is three letters. Value is three blank characters if identification of the controlling facility is not available.	AIA	No
receivingSector_139b	This element contains the ARTS IIII Receiving Position, or the receiving ERAM ARTCC sector number. The value is 00 if the identification of the receiving sector is not available.	string	No	**"[0-9][A-Z0-9]"** The format is one digit followed by one alphanumeric character.	Facility position in Houston ARTS: IN The receiving ERAM ARTCC sector number:	Yes

DRAFT

Element Name [OH]	Element Definition	Type	Complex?	Format/Permissible Values	Example	Required?
					74	
acceptingFacility_334a	This element contains the accepting facility identifier. The accepting facility is the facility receiving the flight when the handoff was initiated. Data in this field indicates that a handoff is accepted.	string	No	**"[A-Z]{3}"** The format consists of three letters.	ZCA	No
acceptingSector_335a	This element contains the accepting sector data. The accepting sector is the receiving sector/position that accepts the flight in handoff status. Element *acceptingSector_335a* is the same as element *receivingSector_139b*.	string	No	**"[0-9][A-Z0-9]"** The format is one digit followed by one alphanumeric character.	1B 49	No
handoffEventIndicator_336a	This element contains the handoff event indicator. The possible values and their meanings are: I – initiation A – acceptance R – retraction T – take control U – update F – failure	string	No	**"[IARTUF]"** One of the letters above.	I A	Yes

DRAFT

5.5.1.78 Handoff Status [OH] – Diagram

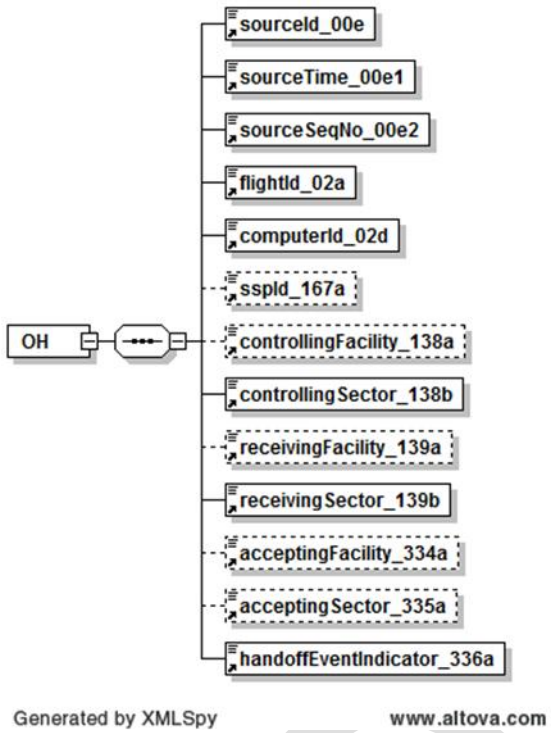

5.5.1.79 Handoff Status Message in FIXM Format [OH_FIXM] – Data Elements

The following elements of the HV message in Simple XML format are not used in the FIXM format of the message:

- sourceId_00e
- sourceTime_00e1
- sourceSeqNo_00e2

DRAFT

Name [OH_FIXM]	Name [OH]	Definition	Type	Complex?	Format/Permissible Values	Example	Required?
flight/supplementalData/additionalFlightInformation/nameValue/@name flight/supplementalData/additionalFlightInformation/nameValue/@value	FDPS_SequenceNo	Sequence number assigned by SFDPS to each message it receives from HADDS. The attribute *name* includes the constant string "MSG_SEQ_NO", and the attribute *value* contains the sequence number value.	@name: @value: fb:FreeTextType	No	@name: ”MSG_SEQ_NO” @value: xs:nonNegativeInteger xs:maxInclusive value="999999999"	@name="MSG_SEQ_NO" @value="6860416"	Yes
flight/departure/@departurePoint	FDPS_Origin/departurePoint_26a	Attribute used to specify the first point or other initial entity where the air traffic control/management system route starts.	fb:FreeTextType	No	xs:string minLength=2, maxLength=12 **"([A-Z0-9]{2,5}) | ([A-Z0-9]{2,5}\d{6}) | (\d{4}[A-Z]?/\d{4,5}[A-Z]?)”** Any of the standard ways to represent a fix can be used for this element (fix name, lat/long, or fix-radial-distance), including the standard airport designators.	**AB** **DFW** **KDFW** **SHP090015** **ATOKA300040** **3500N/04000W**	No
flight/arrival/@arrivalPoint	FDPS_DestId/destination_27a	The final point or other final entity where the air traffic control/management system route terminates.	fb:FreeTextType	No	xs:string minLength=2, maxLength=12 **"([A-Z0-9]{2,5}) | ([A-Z0-9]{2,5}\d{6}) | (\d{4}[A-Z]?/\d{4,5}[A-Z]?)”** Any of the standard ways to represent a fix can be used for this element (fix name, lat/long, or fix-radial-distance), including the	**AB** **DFW** **KDFW** **SHP090015** **ATOKA300040** **3500N/04000W**	No

DRAFT

Name [OH_FIXM]	Name [OH]	Definition	Type	Complex?	Format/Permissible Values	Example	Required?
					standard airport designators.		
flight/operator/operatingOrganization/organization/@name	FDPS_FlightOperator/OPRIndicator_918f	Attribute used to specify the full official name of the State, Organization, Authority, aircraft operating agency, handling agency engaged in or offering to engage in aircraft operation.	ff:TextNameType	No	xs:string	UAL	No
flight/@system	propSourceSystem	This attribute indicates which SFDPS system generated the message.	fb:ProvenanceSystemType	No	xs:string maxLength=128	FDPS1	Yes
flight/@timestamp	propRcvdTime	This attribute conatins the time at which the message was received by SFDPS.	ff:TimeType	No	xs:dateTime	2015-12-18T22:19:02.028Z	Yes
flight/@centre	center	This attribute specifies the code of the ARTCC (or FIR) that produced the data.	fb:ProvenanceCentreType	No	xs:string	ZAU	Yes
flight/arrival/runwayPositionAndTime/runwayTime/[estimated|actual]/@time	arrivalTime	This attribute specifies the proposed or the actual time of arrival at destination, set according to the flight state.	ff:TimeType	No	xs:dateTime	2014-06-20T20:17:52	Yes
flight/departure/runwayPositionAndTime/runwayTime/[actual|estimated]/@time	departureTime	This element specifies the proposed or actual departure time, set according to the flight state.	ff:TimeType	No	xs:dateTime	2014-06-20T20:17:52	Yes
flight/flightStatus/@fdpsFlightStatus	flightState	This attribute contains the current status of the flight as specified by SFDPS.	nas:SfdpsFlightStatusType	Yes	xs:string "PROPOSED|ACTIVE|COMPLETED|CANCELLED|DROPPED"	ACTIVE	Yes
flight/supplementalData/additionalFlightInformation/nameValue	fdpsGufi	The name value pair specifies the SFDPS GUFI, an identifier on every message that positively identifies	fb:FreeTextType	No	xs:string @name: "FDPS_GUFI"	name="FDPS_GUFI" value="us.fdps.2015-12-18T16:59:10Z.000/14/100	Yes

DRAFT

Name [OH_FIXM]	Name [OH]	Definition	Type	Complex?	Format/Permissible Values	Example	Required?
/@name flight/supplementalData/additionalFlightInformation/nameValue/@value		what flight the message is for.			@value: "us\.fdps\.\d{4}-\d{2}-\d{2}T\d{2}:\d{2}:\d{2}Z\.[A-Za-z0-9/]+"	"/>	
flight/flightPlan/@identifier	eramGufi_316aFPId	This attribute specifies the unique flight plan identifier.	fb:FreeTextType	No	xs:string "[A-Z]{2}\d{5}[1-7]\d{2}"	"KU68378100"	No
flight/gufi	uuidGufi	This element contains a reference that uniquely identifies a flight and that is independent of any particular system. This reference conforms to the Universal Unique Identifier standard.	fb:GloballyFlightIdentifierType		xs:string "[0-9a-fA-F]{8}\-[0-9a-fA-F]{4}\-4[0-9a-fA-F]{3}\-[89aAbB][0-9a-fA-F]{3}\-[0-9a-fA-F]{12}"	4aaf92be-ac0a-4dba-998f-9e56f5d450b6	Yes
flight/flightIdentification/@aircraftIdentification	flightId_02a	Name used by Air Traffic Services units to identify and communicate with an aircraft.	fb:FlightIdentifierType	No	**"[A-Z0-9]{7}"**	**AAL20**	Yes
flight/supplementalData/additionalFlightInformation/nameValue/@name flight/supplementalData/additionalFlightInformation/nameValue/@value		The flight supplemental data is used to indicate that a flight message is a test message, by setting the attribute *name* to "**SIMULATED_FLIGHT**" and the attribute *value* to "**true**".	*@name:* *@value*: fb:FreeTextType	No	*@name:* **"[A-Z0-9_]{1,20}"** *@value:* **xs:string** **minLength=1, maxLength=100** @name = **"SIMULATED_FLIGHT"** @value = **"true"**	@name = **"SIMULATED_FLIGHT"** @value = **"true"**	No
flight/flightIdentification/@computerId	computerId_02d	A unique identification assigned by ERAM to each flight plan.	fb:FreeTextType	No	**"([0-9][A-HJ-NP-Z0-9]{2})| ([0-9]{2}[A-HJ-NP-Z0-9])"** The element includes a digit, followed by two	**020**	No

DRAFT

Name [OH_FIXM]	Name [OH]	Definition	Type	Complex?	Format/Permissible Values	Example	Required?
					alphanumeric characters with the exception of the letters **I** and **O**, such as *ddd, ddL, dLd, dLL*.		
flight/flightIdentification/@siteSpecificPlanId	sspId_167a	Site Specific Plan Identifier. It is assigned by Instrument Flight Procedures Automation (IFPA) to uniquely identify a flight plan in each ERAM facility.	fb:CountType	No	**"\d{1,4}"** One to four-digits.	**24**	No
flight/controllingUnit/@unitIdentifier	controllingFacility_138a	This element specifies the identifier of the Air Traffic Control unit in control of the aircraft.	ff:AtcUnitNameType	No	**"([A-Z]{4})|([A-Za-z0-9]{1, })"**	ZCH	No
flight/controllingUnit/@sectorIdentifier	controllingSector_138b	This element specifies sector number of the Air Traffic Control sector in control of the aircraft.	fb:FreeStringType	No	**"\d[A-Z0-9]"** The format is one digit followed by one alphanumeric.	1W	No
flight/enRoute/boundaryCrossings/handoff/receivingUnit/@unitIdentifier	receivingFacility_139a	This element specifies the Air Traffic Control unit receiving control of the aircraft as a result of a handoff.	ff:AtcUnitNameType	No	**"([A-Z]{4})|([A-Za-z0-9]{1, })"**	AIA	No
flight/enRoute/boundaryCrossings/handoff/receivingUnit/@sectorIdentifier	receivingSector_139b	This element specifies the ATC sector receiving control of the aircraft as a result of a handoff.	fb:FreeStringType	No	**"[0-9][A-Z0-9]"** The format is one digit followed by one alphanumeric.	1W	No
flight/enRoute/boundaryCrossings/handoff/acceptingUnit/@unitIdentifier	acceptingFacility_334a	This element contains the accepting facility identifier. The accepting facility is the facility receiving the flight when the handoff was initiated. Data in this field indicates that a handoff is accepted.	ff:AtcUnitNameType	No	**"([A-Z]{4})|([A-Za-z0-9]{1, })"**	ZCH	No
flight/enRoute/boundaryCrossings/handoff/acceptingUnit/@sect	acceptingSector_335a	This element contains the accepting sector data. The accepting sector is the receiving sector that accepts the	fb:FreeStringType	No	**"[0-9][A-Z0-9]"**	1B 49	No

DRAFT

Name [OH_FIXM]	Name [OH]	Definition	Type	Complex?	Format/Permissible Values	Example	Required?
orIdentifier		flight in handoff status.					
flight/enRoute/boundaryCrossings/handoff/@event	handoffEventIndicator_336a	This element contains the handoff status.	nas:NasHandoffEventType	No	**"INITIATION|ACCEPTANCE|RETRACTION|TAKE_CONTROL|UPDATE|FAILURE"**	**ACCEPTANCE**	Yes

5.5.1.80 Flight Plan Reconstitution [DBRTFPI] – Data Elements

Element Name [DBRTFPI]	Element Definition	Type	Complex?	Format/Permissible Values	Example	Required?
computerId_02d	ERAM Computer Identification (Computer ID).	string	No	**"([0-9][A-HJ-NP-Z0-9]{2})| ([0-9]{2}[A-HJ-NP-Z0-9])"** The element includes a digit, followed by two alphanumeric characters with the exception of the letters **I** and **O**, such as *ddd, ddL, dLd, dLL*.	**020**	No
flightId_02a	Aircraft ID, or flight ID (also called Call Sign).	string	No	**"\+?[A-Z][A-Z0-9]{1,6}"** One uppercase alphabetic character followed by one to six alphanumeric characters.	**AAL20**	Yes
eramGufi_316a	GUFI that uniquely identifies each flight in the system.	string	No	**"[A-Z]{2}\d{5}[1-7]\d{2}"** This element includes 10 alphanumeric characters: -ICAO country code (one letter); -en-route facility ID (one letter); -time in seconds of current day (five digits in the range 00000-86400); -sequence number (two digits).	**KB5980017**	No
sspId_167a	Site Specific Plan Identifier. It is assigned by IFPA to uniquely identify a flight plan in each ERAM facility.	string	No	**"\d{1,4}"** One to four digits.	**24**	No

Element Name [DBRTFPI]	Element Definition	Type	Complex?	Format/Permissible Values	Example	Required?
numberOfAircraft_03a	This element includes the number of aircraft for the flight followed optionally by the Special Aircraft Indicator.	string	No	**"\d{0,2}[A-Z]?"** The element consists of zero to two digits optionally followed by one uppercase letter to represent the Special Aircraft Indicator. The indicator can also appear on its own (without the leading digits).	**3H** The number of aircraft is 3 and the special aircraft indicator is **H** for Heavy Jet.	No
typeOfAircraft_03c	Type of aircraft.	string	No	**"[A-Z][A-Z0-9]{1,3}"** The element consists of one letter followed by one to three alphanumeric characters.	**B747**	Yes
airborneEquip_03e	Airborne equipment qualifier. It consists of one alphanumeric character.	string	No	**"[A-Z]"** The element consists of one alphanumeric character, that can have one of the following values: **A** - Transponder with no Mode C **B** - Transponder with Mode C **E** – FMS with DME/DME and IRU position updating **G** – GNSS, including GPS or WAAS, with en-route and terminal capability **X** – No transponder **W** - RVSM	**E**	No
beaconCode_04a	Beacon code.	string	No	**"[0-7]{4}"** The element includes four octal digits (i.e. 0-7). When the last two digits of the four digits are zero, the beacon code is a non-discrete code. A discrete code is any code not ending in 00.	Non-discrete VFR code: **2101**	No
trueAirSpeed_05a	True airspeed expressed in knots.	string	No	**"\d{2,4}"** The format is two to four digits, in the range 01 – 3700 knots.	**540** Aircraft true	Yes, if neither machSpeed_

DRAFT

Element Name [DBRTFPI]	Element Definition	Type	Complex?	Format/Permissible Values	Example	Required?
				Aircraft speed is required to be specified by using one of the three possible elements: trueAirSpeed_05a, machSpeed_05c or classifiedSpeed_05d.	airspeed is 54,000 knots.	05c nor classifiedSpeed_05d are included in the message.
machSpeed_05c	Mach speed.	string	No	**"M\d{3}"** The letter **M** followed by three digits. The maximum value is M500.	The speed 0.85 Mach is represented as **M085**.	Yes, if neither trueAirSpeed_05a nor classifiedSpeed_05dare included in the message.
classifiedSpeed_05d	Adapted classified speed. It is not printed on flight strips.	string	No	**"SC"**	This element may only include the string character **SC**.	Yes, if neither trueAirSpeed_05a nor machSpeed_05c are included in the message.
coordFix_06a	The Coordination fix represents the starting point to begin processing the flight plan route from one of the following points: the departure airport, the airfile fix or the adjacent center inbound coordination fix. For ARTS III flight plans the coordination fix Field 06 is used as the inbound coordination fix or the outbound coordination fix or, for an ARTS internal flight, it can be the departure or destination airport.	string	No	**"([A-Z0-9]{2,5})|** **([A-Z0-9]{2,5}\d{6}) |** **(\d{4}[A-Z]?/\d{4,5}[A-Z]?)|** **([A-Z0-9]{3,4}}"** This element can have one of the following formats: Two to five alphanumeric characters for a fix name. The fix name as above followed by six digits, for a fix radial distance. Four digits followed by an optional alphabetic character, followed by a virgule ('/'), followed by four to five digits followed by an optional alphanumeric character for a lat/long. Three to four alphanumeric characters for	**AB** **DFW** **KDFW** **AB200010** **SHP090015** **ATOKA300040** **3500/04000** **3500N/04000W**	Yes

DRAFT

Element Name [DBRTFPI]	Element Definition	Type	Complex?	Format/Permissible Values	Example	Required?
				aLOCID.		
coordStatusTime_07d	Coordination time that represents the starting time in hours and minutes at the coordination fix.	string	No	**"((A|D|E|P|F)[0-1][0-9][0-5][0-9) | ((A|D|E|P|F)2[0-3][0-5][0-9])"** The element includes one letter (possible values are **A**, **D, E**, **P**, or **F**) followed by four digits that represent time as *hhmm*.	**P1020**	Yes
coordStatus_07d1	The coordStatus field is the single letter **A**, **D**, **E**, **F**, or **P**, as described for element coordStatusTime_07d.	string	No	**"(A|D|E|P|F)"**	**F**	Yes
coordTime_07d2	Starting time at the coordination fix.	dateTime	No	**dateTime**	**2014-06-20T20:17:52**	Yes
delayTime_07e	Delay time in expressed in minutes.	string	No	**"\d{3}"** Three digits.	**030**	No
departureTime_243n	This element specifies the reported (actual) departure time.	dateTime	No	**dateTime**	**2014-06-20T20:17:52**	No
proposedDepartureTime_2431	This element specifies the proposed departure time.	dateTime	No	**dateTime**	**2014-06-20T20:17:52**	No
estDepartureClearanceTime_2432	This element specifies the EDCT.	dateTime	No	**dateTime**	**2014-06-20T20:27:52**	No
arrivalTime_28b	This element specifies the reported (actual) arrival time.	dateTime	No	**dateTime**	**2014-06-20T22:27:52**	No
assignedAlt_08a	Assigned altitude or flight level expressed in hundreds of feet. Only one of the altitude elements	string	No	**"(\d{2,3}) | VFR"** The format consists of either two to three digits, or the constant string **VFR**. Three digits	Assigned altitude of 34,000	No

DRAFT

Element Name [DBRTFPI]	Element Definition	Type	Complex?	Format/Permissible Values	Example	Required?
	assignedAlt_08a, assignedAlt_08b, assignedAlt_08c, assignedAlt_08d, assignedAlt_08e, assignedAlt_08f, assignedAlt_08g, assignedAlt_08h may be included in the message.			are required for ARTS III, thus a leading zero needs to be used when necessary.	feet: **340** Assigned altitude 9,000 feet ARTS III: **090**	
assignedAlt_08b	Fixed value of **OTP** which indicates VFR-ON-Top. It specifies that the aircraft is flying above the clouds in VFR conditions.	string	No	**"OTP"**	**OTP**	No
assignedAlt_08c	VFR-ON-Top with altitude. It represents an IFR flight operating above the clouds in VFR conditions at the specified assigned altitude.	string	No	"**OTP/\d{2,3}**" The format is the constant string **OTP**/ followed by two to three digits that represent the assigned altitude in hundreds of feet.	Aircraft flying VFR-ON-Top at 25,000 feet: **OTP/250**	No
assignedAlt_08d	The assigned block of altitudes for the flight to fly at.	string	No	**"\d{2,3}B\d{2,3}"** The format is two to three digits, followed by the letter **B**, followed by two to three digits. The leading and trailing two to three digits define the block of altitudes in hundreds of feet for the flight to fly at. The lowest altitude must be listed first.	Assigned altitude block of 8,000 feet to 14,000 feet: **80B140**	No
assignedAlt_08e	Element used for IFR flights operating above a specified altitude.	string	No	**"ABV/\d{2,3}"** The format consists of the string **ABV/** followed by two to three digits that represent the altitude in hundreds of feet above which the flight is flying.	Aircraft is flying above 60,000 feet. **ABV/600**	No
assignedAlt_08f	Assigned Altitude/FIX/Altitude element specifies the altitudes to and from a fix for the flight to fly at.	string	No	**"(\d{2,3}/[A-Z0-9]{2,5}/\d{2,3})| (\d{2,3}/[A-Z0-9]{2,5}\d{6}/\d{2,3}) | (\d{2,3}/\d{4}[A-Z]?/\d{4,5}[A-Z]?/\d{2,3})"** The altitudes are specified in hundreds of feet	**240/DAL350010/220** Flight flies at altitude	No

DRAFT

Element Name [DBRTFPI]	Element Definition	Type	Complex?	Format/Permissible Values	Example	Required?
				in a two to three digit format. The fix is specified using the same format as the coordination fix element "coordFix_06a". The fix cannot be the departure or arrival point.	24,000 feet to the fix radial distance fix and then descend to altitude 22,000 feet.	
assignedAlt_08g	It is used to specify that the flight is flying Visual Flight Rules (VFR). It can only have the value **VFR**.	string	No	**"VFR"**	**VFR.**	No
assignedAlt_08h	It is used to specify that the flight is flying VFR at a specified altitude.	string	No	**"VFR/\d{2,3}"** The format consists of the string **VFR/** followed by two to three digits that represent an altitude in hundreds of feet.	**VFR/75** The aircraft is flying VFR at 7,500 feet.	No
requestedAlt_09a	The element is used to specify requested altitude or flight level in hundreds of feet. Only one of the seven requested altitude elements (requestedAlt_09a to requestedAlt_08g) may be included in a proposed flight message.	string	No	**"\d{2,3}"** The format consists of two to three digits. ARTS III requires three characters, with a leading **0** when required (such as 090).	**340** Aircraft is requesting to fly at 34,000 feet altitude.	No
requestedAlt_09b	The element Requested Altitude format OTP represents an IFR flight requesting to operate above the clouds in VFR conditions. OTP stands for VFR-ON-Top.	string	No	**"OTP"**	The element has a fixed value of **OTP**.	No
requestedAlt_09c	The element "Requested Altitude format OTP with altitude" represents a flight requesting to operate VFR-ON-Top at the requested altitude. numberOfAircraft_03a.	string	No	**"OTP/\d{2,3}"** The format consists of the string **OTP/** followed by two to three digits that represent the requested altitude in hundreds of feet. ERAM only sends ARTS III the requested	**OTP/250** Flight is requesting to fly VFR-ON-Top at	No

Element Name [DBRTFPI]	Element Definition	Type	Complex?	Format/Permissible Values	Example	Required?
				altitude with a format of three digits (leading zeroes used when necessary, as in 090) and places a special altitude indicator (**U** if Heavy Jet) in element numberOfAircraft_03a.	25,000 feet.	
requestedAlt_09d	Element used for an IFR flight requesting to operate above a specified altitude.	string	No	"ABV/\d{2,3}" The format consists of the string **ABV/** followed by two to three digits that represent the requested altitude in hundreds of feet.	**ABV/600**	No
requestedAlt_09e	Element used to specify a requested block of altitudes or flight levels for the flight to fly at. The altitudes are specified in hundreds of feet.	string	No	**"\d{2,3}B\d{2,3}"** The format consists of two to three digits for the lowest altitude, followed by the letter **B**, followed by two to three digits for the highest altitude.	**250B260** Flight is requesting to fly inside an altitude block between 25,000 feet and 260,000 feet.	No
requestedAlt_09f	This element is used when the aircraft is requesting to fly VFR.	string	No	**"VFR"** It can only include the fixed string "VFR". ERAM sends ARTS III the three characters and also places a special altitude indicator **V** (not a Heavy Jet) or **W** (if a Heavy Jet) in element numberOfAircraft_03a.		No
requestedAlt_09g	The element used to represent a flight requesting to fly VFR at a specified altitude.	string	No	**"VFR/\d{2,3}"** The format consists of the constant string **VFR/** followed by two to three digits that specify the requested altitude in hundreds of feet.	**VFR/35** Aircraft is requesting to fly VFR at 3,500 feet	No
flightPlanRoute_10a	It specifies the trajectory followed by the airplane from the departure point to the arrival point, based on the fixes and routes along that trajectory.	string	No	**"[A-Z0-9+/*]{2,12}_?\.[A-Z0-9+\./]*\.[A-Z0-9+/*]{2,12}_?(/\d{4})?"** The element format consists of a string that includes fixes and routes along the trajectory flown by the airplane. The fixes and routes are	OKC.V14S.TUL.TUL090..FYV270.FYV	Yes

DRAFT

Element Name [DBRTFPI]	Element Definition	Type	Complex?	Format/Permissible Values	Example	Required?
				specified using the FIX.ROUTE.FIX format, where either element can be implied, such as FIX..FIX, or ROUTE..ROUTE.		
departurePoint_26a	It is used to specify the point at which to start processing the flight plan route as follows: the departure airport or the airfile point.	string	No	**"([A-Z0-9]{2,5}) | ([A-Z0-9]{2,5}\d{6}) | (\d{4}[A-Z]?/\d{4,5}[A-Z]?)"** Any of the standard ways to represent a fix can be used for this element (fix name, lat/long, or fix-radial-distance), including the standard airport designators.	**AB** **DFW** **KDFW** **SHP090015** **ATOKA300040** **3500N/04000W**	Yes
destination_27a	It is used to specify the point at which to end processing the flight plan route.	string	No	**"([A-Z0-9]{2,5}) | ([A-Z0-9]{2,5}\d{6}) | (\d{4}[A-Z]?/\d{4,5}[A-Z]?)"** Any of the standard ways to represent a fix can be used for this element (fix name, lat/long, or fix-radial-distance), including the standard airport designators.	**AB** **DFW** **KDFW** **SHP090015** **ATOKA300040** **3500N/04000W**	Yes
ETE_2439	This element specifies the estimated time en route (ETE).	duration	No		PT2H30M	No
ETA_28a	This element specifies the estimated time of arrival at the flight plan destination.	dateTime	No	**dateTime**	**2014-06-20T22:27:52**	No
remarks_11c	Flight plan remarks text.	string	No	**The string is from 1 to 400 characters in length.** It has an attribute called *remarktype* with the possible values of interfacility or intrafacility.	**OAIR EVAC AMG/N0482F290 SQT/N0479F310 JOL+**	No
holdDataFix_21a	This element specifies the position location for the flight to hold along the filed route of flight. If the message does not include	string	No	**"([A-Z0-9]{2,5}) | ([A-Z0-9]{2,5}\d{6}) | (\d{4}[A-Z]?/\d{4,5}[A-Z]?)"**	**AB** **KDFW** **SHP090015**	No

DRAFT

Element Name [DBRTFPI]	Element Definition	Type	Complex?	Format/Permissible Values	Example	Required?
	the optional *holdDataTime_21d* element, the flight goes into an indefinite hold status when the flight arrives at the hold fix.			Any of the valid fix formats can be used, as described for *coordFix_06a* element.	**3500N/04000W**	
holdDataTime_21d	This element specifies the time the flight can expect further clearance at the holding location specified in the element *holdDataFix_21a*. This element can only be included in the HH messages if the element *holdDataFix_21a* is also included.	dateTime	No	**dateTime**	**2014-06-20T20:17:52**	No
progressReportFix_18a	This element specifies the position location report of the flight along the filed route of flight.	string	No	**"([A-Z0-9]{2,5}) | ([A-Z0-9]{2,5}\d{6}) | (\d{4}[A-Z]?/\d{4,5}[A-Z]?)"** It uses the standard fix formats, as specified for the element *coordFix_06a* **.**	**AB** **KDFW** **SHP090015**	No
progressReportTime_18d	This element specifies the time of the flight arriving at the fix specified in element *progressReportFix_18a*, above.	dateTime	No	**dateTime**	**2014-06-20T20:17:52**	No
departureAutoRouteInhibitIndicator_244g	This element specifies whether the departure route from the departure airport is inhibited or not.	string	No	**"*"**	*****	No
destinationAutoRouteInhibitIndicator_244h	This element specifies whether the arrival route to the arrival airport is inhibited or not.	string	No	**"*"**	*****	No
interimAlt_76b	This element specifies the interim altitude for the flight in hundreds of feet.	string	No	**"\d{1,3}"** The format is one to three digits, in the range 0 to 999.	**240** Aircraft interim altitude of 24,000 feet.	No
AARFld10_142e	This element includes the AAR preferential	string	No	**"[A-Z0-9\./]{4,97}"**	**./.BLEUZ.R**	No

DRAFT

Element Name [DBRTFPI]	Element Definition	Type	Complex?	Format/Permissible Values	Example	Required?
	route in Field 10 format. **Either this element or the element** *AARNonFld10_142f* may be included in the message.			Field 10 format.	**YTHM3.**	
AARNonFld10_142f	This element includes the AAR preferential route in non-Field 10 format. **Either this element or the element** *AARFld10_142e* may be included in the message.	string	No	**"[A-Z0-9\./\+]{4,97}"** A "+" delimiter precedes and follows the non-Field10 elements.	**.J25.CRP+LISSE6+** Notice the non-Field10 substring that is enclosed between "+" characters.	No
ADRFld10_142c	Adapted ADR preferential route in Field 10 format. **Either this element or the element** *ADRNonFld10_142d* may be included in the message.	string	No	**"[A-Z0-9\./*]{4,84}"** Field 10 format.	**.ALAMO6.HENLY.J131.FUZ.J105.**	No
ADRNonFld10_142d	Adapted ADR preferential route in non-Field 10 format. **Either this element or the element** *ADRFld10_142c* may be included in the message.	string	No	**"[A-Z0-9\./\+ -]{4,84}"** A "+" delimiter precedes and follows the non-Field10 elements.	**+RV J25+CRP.LISSE6** Notice the non-Field10 substring that is enclosed between "+" characters.	No
ADARFld10_142a	This element contains the adapted ADAR preferential route in Field 10 format. The	string	No	**"[A-Z0-9\./]{4,44}"** Field 10 format.	.PSX2.PSX.V20.CRP.	No

DRAFT

Element Name [DBRTFPI]	Element Definition	Type	Complex?	Format/Permissible Values	Example	Required?
	Preferential Route Alphanumerics are used to control the flow and separation of traffic departing and arriving at designated airports. An ADAR has the complete preferential routing from the departure airport to the arrival airport. **Either this element or the element** *ADARNonFld10_142b* may be included in the message.					
ADARNonFld10_142b	This element contains the adapted ADAR preferential route in non-Field 10 format. If required for the flight and if the element ADARFld10_142a is not included in the message, the FH message contains this element for the ADAR adapted route. **Either this element or the element** *ADARFld10_142a* may be included in the message.	string	No	**"[A-Z0-9\./\+]{4,44}"** A "+" delimiter will precede and follow the non-Field10 elements.	+LISSE6+ +TS1 MEM270 LIT050+	No
AARId_141c	If required for the flight, this element specifies the AAR adapted arrival route name.	string	No	**"\d{5}"**	PA001	No
ADRId_141b	If required for the flight, the Adapted Route indicator format specifies the ADR adapted departure route name.	string	No	**"\d{5}"**	PD001	No
ADARId_141a	If required for the flight, this element specifies the ADAR departure arrival route name.	string	No	**"\d{5}"** The format consists of five alphanumeric characters.	DA001	No
FPA_143a0	FPA containing the first postable fix (1st)	string	No	**"\d{4}"**	7601	No
FPA_143a1	FPA containing the first postable fix (2nd)	string	No	**"\d{4}"**	7601	No
FPA_143a2	FPA containing the first postable fix (3rd)	string	No	**"\d{4}"**	7601	No
FPA_143a3	FPA containing the first postable fix (4th)	string	No	**"\d{4}"**	7601	No

DRAFT

Element Name [DBRTFPI]	Element Definition	Type	Complex?	Format/Permissible Values	Example	Required?
FAV_143b0	The element specifies the FAV number containing the first fix where the route alteration occurs due to an AAR application.	string	No	**"\d{4}"** The format is four digits.	7601	No
FAV_143b1	The element specifies the FAV number containing the second fix where the route alteration occurs due to an AAR application.	string	No	**"\d{4}"** The format is four digits.	7601	No
FAV_143b2	The element specifies the FAV number containing the third fix where the route alteration occurs due to an AAR application.	string	No	**"\d{4}"** The format is four digits.	7601	No
FAV_143b3	The element specifies the FAV number containing the fourth fix where the route alteration occurs due to an AAR application.	string	No	**"\d{4}"** The format is four digits.	7601	No
timeBtw1stAndLastConvertedRouteFix_2449	The element specifies the time interval between the first and last converted route fix.	duration	No		PT30M **The above value specifies a period of 30 minutes**	No
flightRules_908a	This element specifies the flight rules as one character as follows: **I** = IFR **V** = VFR **Y** = IFR First **Z** = VFR First	string	No	**"[IVYZ]"** If **Y** or **Z** is used, the point or points at which a change of flight rules is planned should be shown in the route.	V	No
typeOfFlight_908b	This element specifies the type of flight specified using one of the following characters: **S** = Scheduled air transport **N** = Non-scheduled air transport **G** = General Aviation **M**= Military	string	No	**"[SNGMO]"**	N	No

DRAFT

Element Name [DBRTFPI]	Element Definition	Type	Complex?	Format/Permissible Values	Example	Required?
	O = Other flights					
wakeTurbulenceCat_909c	This element specifies the wake turbulence category as heavy, medium or light.	string	No	**"[HML]"** , where: **H** = Heavy **M** = Medium **L =** Light	H M L	No
comNavApproachEquip_910a	Airborne Equipment Qualifier: Radio Communication, Navigation, and Approach AID Equipment.	string	No	**"([A-M,O-Z]{1,25}) | N"** This element has one required plus 24 optional letters. The 25 possible letters are the letters **A** through **Z** and each letter can only be used once. If the letter **N** is present, it must be the only letter present.	SCHJ See ICAO 4444 for the complete list of characters.	No
survEquip_910b	This element represents the ICAO airborne equipment qualifier.	string	No	**"[NACXPIS][D]?"** The format consists of up to two letters. The first letter must be one of the SSR equipment letters and the second letter, if used, must be the ADS capability letter **"D"**. The valid values for the first letter and their significance are: **N**: Nil **A**: Transponder Mode A **C**: Transponder Mode A and C **X**: Transponder Mode S without both aircraft ID and pressure-altitude transmission **P**: Transponder Mode S, with pressure-altitude transmission but aircraft ID transmission **I**: Transponder Mode S with aircraft ID transmission but no pressure-altitude transmission **S**: Transponder Mode S with both pressure-altitude and aircraft ID transmission **D**: ADS capability	**SSR equipment as Mode S with ADS capability:** SD	No

DRAFT

Element Name [DBRTFPI]	Element Definition	Type	Complex?	Format/Permissible Values	Example	Required?
altAero_916c	This element contains Alternate Arrival Point(s) or Aerodrome(s), if any. More than one alternate arrival points of aerodromes may be specified.	string	No	**"([A-Z]{4} ?[A-Z]{0,4}) | ([A-Z0-9]{2,5}) | ([A-Z0-9]{2,5}\d{6}) | (\d{4}[A-Z]?/\d{4,5}[A-Z]?) | ([A-Z0-9]{3,4})"** The aerodrome is specified using the 4-letter ICAO name or ZZZZ if no ICAO location indicator has been allocated. The arrival point format has to be one of the fix formats described above (see coordFix_06a). If two or more alternatives are included, they may have any of the valid formats and they have to be separated by blanks.	EBBR EDDL	No
FDB4thLineHeading_155a	This element is used to display the heading of the aircraft issued by the controller. Its format is one to four alphanumeric characters. Samples: 075, H075.	string	No	**"[A-Z0-9]{1,4}"**	**075** **H075**	No
FDB4thLineSpeed_155b	This element is used to display the speed of the aircraft issued by the controller.	string	No	**"[A-Z0-9+-\.]{1,4}"** Minimum length = 1 character Maximum length = 4 characters.	280+ S260 M83+ .75-	No
FDB4thLineText_155c	This element is used to display free-form text issued by the controller.	string	No	**"[A-Z0-9+-=*/_;\.,\\\|^v]{1,8}"** The allowed characters are the alphanumeric characters, −, +, =, *, /, underscore (_), semicolon (;), period (.), and comma (,). No leading or embedded spaces are allowed. It can be one to eight characters long.	-BUFFI NOBBL BLVNS	No
externalBeaconCode_04b	This element specifies the external beacon. It contains the requested beacon code when the flight plan is inbound from an adjacent Center or an adjacent Non-U.S. Automated Facility, the requested beacon code is different from the assigned beacon code, and the aircraft is not established on	string	No	**"[0-7]{4}"** It has the same format as element beaconCode_04a.	**3434**	No

DRAFT

Element Name [DBRTFPI]	Element Definition	Type	Complex?	Format/Permissible Values	Example	Required?
	the assigned beacon code. Then, if the facility is adapted to receive Field (04b), Field 04b is transmitted.					
localIntendedRoute_10b	The Local Intended Route element contains the flight plan route that is coordinated to penetrated facilities. It consists of the flight plan route with any expected-to-be-applied-by-the-controlling-center ADRs, ADARs or AARs already applied. It is intended for the clients that wish to know the expected state of the flight plan when the current facility releases control of the flight. Element localIntendedRoute_10b contains the filed route (field 10a) merged with any locally applicable adapted routes (preferential routes, transition fixes and A-line fixes). Optional Field 10b is sent to ATM-IPOP, when Field 10b is not the same as Field 10a.	string	No	**"[A-Z0-9+/*]{2,12}_?\.[A-Z0-9+\./]*\.[A-Z0-9+/*]{2,12}_?(/\d{4})?"** Minimum length = 3 Maximum length = 1000		No
timeRouteValues_2461	This element contains the time of the route values.	dateTime	No	**dateTime**	**2014-06-20T20:17:52**	No
fixTimes	This element specifies the fix and calculated time of arrival at each fix that describes the aircraft's ERAM converted route of flight.		Yes	Sequence of the elements *fixTime_68c,* fix_68c1, and *crossingTime_68c2*. It can be included between zero and 326 times.		No
fixTime_68c	This element contains a fix and the expected time of arrival at the fix in hours and minutes.	string	No	**"([A-Z0-9]{2,5}/\d{4}) | ([A-Z0-9]{2,5}\d{6}/\d{4}) | (\d{4}[A-Z]?/\d{4,5}[A-Z]?/\d{4}) "** The format consists of a valid representation of a fix (see element coordFix_06a in the FH message table), followed by a virgule, and followed by time in *hhmm* format. Minimum length = 7	**LFT/1800** **JIMIE004034/1320**	No

DRAFT

Element Name [DBRTFPI]	Element Definition	Type	Complex?	Format/Permissible Values	Example	Required?
				Maximum length = 17		
fix_68c1	This element specifies the fix component of the element *fixTime_68c*.	string	No	**"([A-Z0-9]{2,5})| ([A-Z0-9]{2,5}\d{6}) | (\d{4}[A-Z]?/\d{4,5}[A-Z]?)| ([A-Z0-9]{3,4}}"** The format consists of a valid representation of a fix (see element coordFix_06a in the FH message table).	**KDFW 3500N/04000W**	No
crossingTime_68c2	This element specifies the time component of the element *fixTime_68c*.	dateTime	No	The format is *dateTime*, and not *hhmm* as it is in the *fixTime_68c* element.	**2014-06-20T20:17:52**	No
adjacentCenterRouting	It groups the elements *outputRouting_253a* and *FAV_29d*.		Yes	It can be included between zero and 25 times.		No
outputRouting_253a	This element indicates the destination of the output message.	string	No	**"[A-Z+]{1,3}"**		Required in the element *adjacentCenterRouting*.
FAV_29d	This element provides the FAV Airspace Assignment number.	string	No	**"\d{4}"** The format consists in four digits, with leading zeroes as needed.	0053 2509	No
ICAOStoredFormat_918a	This element may only have the value zero, to indicate that none of the Other Information elements (with suffixes 918b – 918x) is present in the message.	string	No	**"0"**	0	No
EETIndicator_918b	This element specifies Significant Points or FIR Boundary designators and accumulated estimated elapsed times to such points or boundaries, when so prescribed on the basis of regional air navigation agreements, or by the appropriate ATS authority. EET stands for Estimated Elapsed Time.	string	No	Freeform text up to a total of 3,000 characters. The element consists of one or more Significant Points with appended estimated flying time from departure in *hhmm* format with a blank separating each occurrence of Significant Point and time.	KZNY0046 HUBE0213	No

DRAFT

Element Name [DBRTFPI]	Element Definition	Type	Complex?	Format/Permissible Values	Example	Required?
RIFIndicator_918c	This element specifies the route to a revised destination aerodrome, followed by the aerodrome location code. The revised route is subject to re-clearance in flight. RIF stands for Revised in Flight.	string	No	Free-form string of up to 3000 characters. The destination aerodrome has to be specified using the four-letter ICAO location code.	DTA HEC KLAX	No
REGIndicator_918d	This element specifies Aircraft Registration (tail number), if different from the aircraft identification specified in element flightId-_02a.	string	No	Free-form string of up to 3000 characters.	N5258E	No
SELIndicator_918e	This element specifies the SELCAL code. SELCAL is a selective-calling radio system that alerts aircraft crew to incoming radio communications.	string	No	Free-form string of up to 3000 characters.	ACHA BRLM	No
OPRIndicator_918f	This field specifies the Aircraft Operator, if not obvious from the aircraft identification in *flightId_02a*.	string	No	Free-form string of up to 3000 characters.	UAL	No
STSIndicator_918g	This element specifies the Reason for Special Handling by ATS, such as hospital aircraft.	string	No	Free-form string of up to 3000 characters. The following are the only valid special handling indicators: **ALTRV** **ATFMX** **FFR** **FLTCK** **HAZMAT** **HEAD** **HOSP** **HUM** **MARSA** **MEDEVAC** **NONRVSM** **SAR**	ALTRV	No

DRAFT

Element Name [DBRTFPI]	Element Definition	Type	Complex?	Format/Permissible Values	Example	Required?
				STATE **NONRNP10** **NO NRPN10** **PROTECTED** **CARGO** **CARGO FLT**		
TYPIndicator_918h	Type(s) of Aircraft, preceded if necessary by number of aircraft, if ZZZZ is specified in the element numberOfAircraft_03a.	string	No	Free-form string of up to 3000 characters.	**CESNA140**	No
PERIndicator_918i		string	No	Single valid letter specified in PAN-OPS 8168 Volume 1: A – Indicated airspeed (IAS) less than 169 km/h (91kt) B – IAS between 169 km/h (91kt) and 224 km/h (121 kt) C – IAS between 224 km/h (121 kt) and 261 km/h (141 kt) D – IAS between 261 km/h (141 kt) and 307 km/h (166 kt) E - IAS between 307 km/h (166 kt) and 391 km/h (211 kt) H - Helicopters	C	No
COMIndicator_918j	This element contains Communication Equipment Data. It is used for additional Communication Equipment on board not specified in the flightPlanRoute_10a element.	string	No	Free-form string of up to 3000 characters.	**HF ONLY** **TCAS**	No
DATIndicator_918k	This element specifies data related to data link capability.	string	No	Free-form string of up to 3000 characters. Valid values are: S – satellite data link H – HF data link V – VHF data link	SV	No

DRAFT

Element Name [DBRTFPI]	Element Definition	Type	Complex?	Format/Permissible Values	Example	Required?
				M – SSR Mode S data link One or more of the valid letters may be specified in this element.		
NAVIndicator_918l	This element contains Navigation Equipment Data. It is used for additional Navigation Equipment not specified in the flightPlanRoute_10a element.	string	No	Free-form string of up to 3000 characters.	**ADF ONLY**	No
DEPIndicator_918m	This element contains the name of the Departure Aerodrome if ZZZZ is specified in Field 13, or the ICAO four-letter location indicator of the location of the ATS unit from which supplementary flight plan data can be obtained, if AFIL is specified in Field 13 (flight plan was filed by an active flight). Note: Field 13 does not appear in FH, AH, and HU messages.	string	No	Free-form string of up to 3000 characters.	**NORTON FIELD**	No
DESTIndicator_918n	This element includes the name of the destination aerodrome.	string	No	Free-form string of up to 3000 characters.	**MILLSPAW FARM**	No
ALTNIndicator_918o	This element includes the name of the alternate destination aerodrome(s).	string	No	Free-form string of up to 3000 characters.	**MILLSPAW FARM**	No
RALTIndicator_918p	This element contains the en-route alternate aerodrome(s).	string	No	Free-form string of up to 3000 characters.	**JP RANCH**	No
CODEIndicator_918q	This element specifies the aircraft Controller-Pilot Data Link Communications (CPDLC) address.	string	No	Free-form string of up to 3000 characters.	45FA16	No
RACEIndicator_918r	This element specifies the requested altitude and speed en route.	string	No	Free-form string of up to 3000 characters.	**KRAFT/M0 80F380**	No
SURIndicator_918s	This element specifies the surveillance applications or capabilities not specified in localIntendedRoute_10b.	string	No	Free-form string of up to 3000 characters.	**282B**	No
DLEIndicator_918t	This element specifies significant en route delay or holding point(s), followed by length of delay. It is new in ICAO 2012.	string	No	Free-form string of up to 3000 characters. The length of delay is specified in the format *hhmm*.	**MDG0030**	No
TALTIndicator_918u	This element specifies the take-off	string	No	Free-form string of up to 3000 characters.	KRAFT	No

DRAFT

Element Name [DBRTFPI]	Element Definition	Type	Complex?	Format/Permissible Values	Example	Required?
	alternate aerodrome.			Valid formats include aerodrome name or any of the fix formats (i.e., lat/long, fix-radial-distance, or name).	FARM	
DOFIndicator_918v	This element specifies the date of flight.	string	No	**"\d{6}"** Six-digit date in the format *yymmdd*.	140617	No
ORGNIndicator_918w	This element specifies the originator's eight-letter AFTN address or other appropriate contact details, in cases where the originator of the flight plan may not be readily identified, as required by the appropriate ATS authority.	string	No	**Eight-letter character string.**	**LEBBYNYX**	No
PBNIndicator_918x	This element specifies the RNAV or RNP capability. PBN stands for Performance Based Navigation.	string	No	Up to eight two-character specifications may be included, for a total of 16 characters. RNAV and RNP capabilities are two-characters each, as follows. RNAV specifications: A1 **RNAV10 (RNP 10)** B**1 RNAV 5 all permitted sensors** B2 **RNAV 5 GNSS** B3 **RNAV 5 DME/DME** B4 **RNAV 5 VOR/DME** B5 **RNAV 5 INS or IRS** B6 **RNAV 5 LORANC** C1 **RNAV 2 all permitted sensors** C2 **RNAV 2 GNSS** C3 **RNAV 2 DME/DME** C4 **RNAV 2 DME/DME/IRU** D1 **RNAV 1 all permitted sensors** D2 **RNAV 1 GNSS** D3 **RNAV 1 DME/DME** D4 **RNAV 1 DME/DME/IRU***RNP* specifications: **L1** RNP 4 **O1** Basic RNP 1 all permitted sensors	B1O1	No

DRAFT

Element Name [DBRTFPI]	Element Definition	Type	Complex?	Format/Permissible Values	Example	Required?
				O2 Basic RNP 1 GNSS **O3** Basic RNP 1 DME/DME **O4** Basic RNP 1 DME/DME/IRU **S1** RNP APCH **S2** RNP APCH with BAR-VNAV **T1** RNP AR APCH with RF (special authorization required) **T2** RNP AR APCH without RF (special authorization required)		
ICAO1stAdaptedField18_999a	Elements having the suffix of *_999a* through *_999y* contain the data that is present for the optionally adapted element 918 indicators that are transmitted to CMS, when applicable, using a Field Reference Number of 999, with elements *a* through *y*.	string	No	Free-form string of up to 3000 characters.		No
ICAO2ndAdaptedField18_999b	Elements having the suffix of _999a through _999y contain the data that is present for the optionally adapted element 918 indicators that are transmitted to CMS, when applicable, using a Field Reference Number of 999, with elements *a* through *y*.	string	No	Free-form string of up to 3000 characters.		No
ICAO3rdAdaptedField18_999c	Elements having the suffix of _999a through _999y contain the data that is present for the optionally adapted element 918 indicators that are transmitted to CMS, when applicable, using a Field Reference Number of 999, with elements *a* through *y*.	string	No	Free-form string of up to 3000 characters.		No
ICAO4thAdaptedField18_999d	Elements having the suffix of _999a through _999y contain the data that is present for the optionally adapted element 918 indicators that are transmitted to CMS, when applicable, using a Field Reference Number of 999, with elements *a* through *y*.	string	No	Free-form string of up to 3000 characters.		No
ICAO5thAdaptedField18_999e	Elements having the suffix of _999a through _999y contain the data that is present for the optionally adapted element	string	No	Free-form string of up to 3000 characters.		No

DRAFT

Element Name [DBRTFPI]	Element Definition	Type	Complex?	Format/Permissible Values	Example	Required?
	918 indicators that are transmitted to CMS, when applicable, using a Field Reference Number of 999, with elements *a* through *y*.					
ICAO6thAdaptedField18_999f	Elements having the suffix of _999a through _999y contain the data that is present for the optionally adapted element 918 indicators that are transmitted to CMS, when applicable, using a Field Reference Number of 999, with elements *a* through *y*.	string	No	Free-form string of up to 3000 characters.		No
ICAO7thAdaptedField18_999g	Elements having the suffix of _999a through _999y contain the data that is present for the optionally adapted element 918 indicators that are transmitted to CMS, when applicable, using a Field Reference Number of 999, with elements *a* through *y*.	string	No	Free-form string of up to 3000 characters.		No
ICAO8thAdaptedField18_999h	Elements having the suffix of _999a through _999y contain the data that is present for the optionally adapted element 918 indicators that are transmitted to CMS, when applicable, using a Field Reference Number of 999, with elements *a* through *y*.	string	No	Free-form string of up to 3000 characters.		No
ICAO9thAdaptedField18_999i	Elements having the suffix of _999a through _999y contain the data that is present for the optionally adapted element 918 indicators that are transmitted to CMS, when applicable, using a Field Reference Number of 999, with elements *a* through *y*.	string	No	Free-form string of up to 3000 characters.		No
ICAO10thAdaptedField18_999j	Elements having the suffix of _999a through _999y contain the data that is present for the optionally adapted element 918 indicators that are transmitted to CMS, when applicable, using a Field Reference Number of 999, with elements *a* through *y*.	string	No	Free-form string of up to 3000 characters.		No
ICAO11thAdaptedField18_999k	Elements having the suffix of _999a through _999y contain the data that is present for the optionally adapted element 918 indicators that are transmitted to CMS,	string	No	Free-form string of up to 3000 characters.		No

DRAFT

Element Name [DBRTFPI]	Element Definition	Type	Complex?	Format/Permissible Values	Example	Required?
	when applicable, using a Field Reference Number of 999, with elements *a* through *y*.					
ICAO12thAdaptedField18_999l	Elements having the suffix of _999a through _999y contain the data that is present for the optionally adapted element 918 indicators that are transmitted to CMS, when applicable, using a Field Reference Number of 999, with elements *a* through *y*.	string	No	Free-form string of up to 3000 characters.		No
ICAO13thAdaptedField18_999m	Elements having the suffix of _999a through _999y contain the data that is present for the optionally adapted element 918 indicators that are transmitted to CMS, when applicable, using a Field Reference Number of 999, with elements *a* through *y*.	string	No	Free-form string of up to 3000 characters.		No
ICAO14thAdaptedField18_999n	Elements having the suffix of _999a through _999y contain the data that is present for the optionally adapted element 918 indicators that are transmitted to CMS, when applicable, using a Field Reference Number of 999, with elements *a* through *y*.	string	No	Free-form string of up to 3000 characters.		No
ICAO15thAdaptedField18_999o	Elements having the suffix of _999a through _999y contain the data that is present for the optionally adapted element 918 indicators that are transmitted to CMS, when applicable, using a Field Reference Number of 999, with elements *a* through *y*.	string	No	Free-form string of up to 3000 characters.		No
ICAO16thAdaptedField18_999p	Elements having the suffix of _999a through _999y contain the data that is present for the optionally adapted element 918 indicators that are transmitted to CMS, when applicable, using a Field Reference Number of 999, with elements *a* through *y*.	string	No	Free-form string of up to 3000 characters.		No
ICAO17thAdaptedField18_999q	Elements having the suffix of _999a through _999y contain the data that is present for the optionally adapted element 918 indicators that are transmitted to CMS, when applicable, using a Field Reference	string	No	Free-form string of up to 3000 characters.		No

DRAFT

Element Name [DBRTFPI]	Element Definition	Type	Complex?	Format/Permissible Values	Example	Required?
	Number of 999, with elements *a* through *y*.					
ICAO18thAdaptedField18_999r	Elements having the suffix of _999a through _999y contain the data that is present for the optionally adapted element 918 indicators that are transmitted to CMS, when applicable, using a Field Reference Number of 999, with elements *a* through *y*.	string	No	Free-form string of up to 3000 characters.		No
ICAO19thAdaptedField18_999s	Elements having the suffix of _999a through _999y contain the data that is present for the optionally adapted element 918 indicators that are transmitted to CMS, when applicable, using a Field Reference Number of 999, with elements *a* through *y*.	string	No	Free-form string of up to 3000 characters.		No
ICAO20thAdaptedField18_999t	Elements having the suffix of _999a through _999y contain the data that is present for the optionally adapted element 918 indicators that are transmitted to CMS, when applicable, using a Field Reference Number of 999, with elements *a* through *y*.	string	No	Free-form string of up to 3000 characters.		No
ICAO21stAdaptedField18_999u	Elements having the suffix of _999a through _999y contain the data that is present for the optionally adapted element 918 indicators that are transmitted to CMS, when applicable, using a Field Reference Number of 999, with elements *a* through *y*.	string	No	Free-form string of up to 3000 characters.		No
ICAO22ndAdaptedField18_999v	Elements having the suffix of _999a through _999y contain the data that is present for the optionally adapted element 918 indicators that are transmitted to CMS, when applicable, using a Field Reference Number of 999, with elements *a* through *y*.	string	No	Free-form string of up to 3000 characters.		No
ICAO23rdAdaptedField18_999w	Elements having the suffix of _999a through _999y contain the data that is present for the optionally adapted element 918 indicators that are transmitted to CMS, when applicable, using a Field Reference Number of 999, with elements *a* through *y*.	string	No	Free-form string of up to 3000 characters.		No

DRAFT

Element Name [DBRTFPI]	Element Definition	Type	Complex?	Format/Permissible Values	Example	Required?
ICAO24thAdaptedField18_999x	Elements having the suffix of _999a through _999y contain the data that is present for the optionally adapted element 918 indicators that are transmitted to CMS, when applicable, using a Field Reference Number of 999, with elements *a* through *y*.	string	No	Free-form string of up to 3000 characters.		No
ICAO25thAdaptedField18_999y	Elements having the suffix of _999a through _999y contain the data that is present for the optionally adapted element 918 indicators that are transmitted to CMS, when applicable, using a Field Reference Number of 999, with elements *a* through *y*.	string	No	Free-form string of up to 3000 characters.		No
lastSeqNo_245a	The ERAM sequence number of the last message received for a flight. Sequence number is part of field 00.	integer	No			Yes
lastFltMsgRcvd_245b	This element specifies the time the last message was received for a flight.	dateTime	No	**dateTime**	**2014-06-20T20:17:52**	Yes
RNVArrival_925a	This element specifies the RNAV accuracy value for the arrival phase of the flight expressed in hundredths (.01) nm.	string	No	**"\d{4}"** The valid range is [0001-9999]. If the value is 0 then the field is not included.	**Accuracy of 0.3 nm:** 0030	No
RNVEnroute_925b	This element specifies the RNAV accuracy value for the en route phase of the flight expressed in hundredths (.01) nm.	string	No	**"\d{4}"** The allowable range is 0001-9999. If the value is 0 then the field is not included.	**Accuracy of 0.1 nm:** 0010	No
RNVOceanic_925c	This element specifies the RNAV accuracy value for the oceanic phase of the flight expressed in hundredths (.01) nm.	string	No	**"\d{4}"** The allowable range is 0001-9999. If the value is 0 then the field is not included.	**Accuracy of 0.1 nm:** 0010	No
RNVDeparture_925d	This element specifies the RNAV accuracy value for the departure phase of the flight expressed in hundredths (.01) nm.	string	No	**"\d{4}"** The allowable range is 0001-9999. If the value is 0 then the field is not included.	**Accuracy of 0.1 nm:** 0010	No

DRAFT

Element Name [DBRTFPI]	Element Definition	Type	Complex?	Format/Permissible Values	Example	Required?
RNVSpare1_925e	This is a spare element.	string	No	**"\d{4}"**		No
RNVSpare2_925f	This is a spare element.	string	No	**"\d{4}"**		No
tentativeFlightPlanIndicator_2459	This element indicates whether the flight plan data is from a tentative flight plan or not.	string	No	**"*"**	*	No
RNPArrival_925g	This element specifies the RNP accuracy value for the arrival phase of the flight expressed in hundredths (.01) nm.	string	No	**"\d{4}"** The allowable range is 0001-9999. If the value is 0 then the field is not included.	**Accuracy of 0.3 nm:** 0030	No
RNPEnroute_925h	This element specifies the RNP accuracy value for the en route phase of the flight expressed in hundredths (.01) nm.	string	No	**"\d{4}"** The allowable range is 0001-9999. If the value is 0 then the field is not included.	**Accuracy of 0.3 nm:** 0030	No
RNPOceanic_925i	This element specifies the RNP accuracy value for the oceanic phase of the flight expressed in hundredths (.01) nm.	string	No	**"\d{4}"** The allowable range is 0001-9999. If the value is 0 then the field is not included.	**Accuracy of 0.3 nm:** 0030	No
RNPDeparture_925j	This element specifies the RNP accuracy value for the departure phase of the flight expressed in hundredths (.01) nm.	string	No	**"\d{4}"** The allowable range is 0001-9999. If the value is 0 then the field is not included.	**Accuracy of 0.3 nm:** 0030	No
RNPSpare1_925k	This is a spare element.	string	No	**"\d{4}"**		No
RNPSpare2_925l	This is a spare element.	string	No	**"\d{4}"**		No
cancellationIndicator_92b	This optional element includes a cancellation indicator.	string	No	**"C"** The letter C is the only valid value.	C	No
ATCIntendedRoute_10c	The ATC Intended Route element contains the current cleared flight plan route with	string	No	**"[A-Z0-9+/*]{2,12}_?\.[A-Z0-9+\./]*\.[A-Z0-9+/*]{2,12}_?(/\d{4})?"**	**JFK.J42.TXK.STAR1.D**	No

DRAFT

Element Name [DBRTFPI]	Element Definition	Type	Complex?	Format/Permissible Values	Example	Required?
	any unacknowledged auto routes already applied. The ATC Intended Route includes to-be-applied AARs that are not to be notified in the current center. It is intended for clients that wish to know the currently expected route of the flight across contiguous ERAM airspace. Field 10c contains the filed route (field 10a) merged with any adapted routes (preferential routes, transition fixes and A-line fixes). Optional Field 10c is sent to ATM-IPOP, when parameter Merged ATC Intended Route Switch (MARS) is ON and if either one of the following is true: If Field 10b exists and Field 10c is not the same as Field 10b If Field 10b does not exist and Field 10c is not the same as Field 10a.			Minimum length = 3 Maximum length = 1000	**FW**	
flightPlanRouteRevNo_2468	This optional element specifies the flight plan route revision number.	string	no	**"[0-9]"**	7	No
reconReportedAlt_2460	If the flight is active, this field contains the reported altitude from the last track messge received for the flight.	String	No	**"\d{1,3}"** One to three digits in the range 0 – 999.	240	No
clearanceRoute_2469		string	no	**"[A-Z0-9+/*]{2,12}_?\.[A-Z0-9+\./]*\.[A-Z0-9+/*]{2,12}_?(/\d{4})?"** Minimum length = 3 Maximum length = 1000		No
comNavApproachEquipICAO2012_910c	This element is the ICOA 2012 version of the element *comNavApproachEquip_910a*.	string	No	**"[A-Z][A-Z0-9]{0,63}"** The valid values are: N – No equipment is carried, or equipment is unserviceable S – Standard equipment is carried and is serviceable A – GBAS landing system B – LPV (APV with SBAS)	ADE3RV	No

DRAFT

Element Name [DBRTFPI]	Element Definition	Type	Complex?	Format/Permissible Values	Example	Required?
				C – LORAN C D – DME E1 – FMC WPR ACARS E2 – D-FIS ACARS E3 – PDC ACARS F – ADF G – GNSS H – HF RTF I – Inertial Navigation J1 – CPDLC ATN VDL Mode 2 J2 – CPDLC FANS 1/A HDFL J3 - CPDLC FANS 1/A VDL Mode A J4 - CPDLC FANS 1/A VDL Mode 2 J5 - CPDLC FANS 1/A SATCOM (INMARSAT) **J6** - CPDLC FANS 1/A SATCOM (MTSAT) J7 - CPDLC FANS 1/A SATCOM (Iridium) K – MLS L – ILS M1 – ATC RTF SATCOM (INMARSAT) M2 - ATC RTF SATCOM (MTSAT) M3 – ATC RTF (Iridium) O – VOR P1-P9 – Reserved for RCP R – PBN approved T – TACAN U – UHF RTF V – VHF RTF W – RVSM approved X – MNPS approved Y – VHF with 8.33 kHz spacing capacity Z – Other equipment carried		
survEquipICAO2012_910d	This element is the ICAO 2012 equivalent of the *element survEquip_910b*.	string	No	**"N|A|C|(C?[BDEGHILPSUVX][BDEGHILPSUVX12]*)"**	HB2U2V2G1	No

DRAFT

Element Name [DBRTFPI]	Element Definition	Type	Complex?	Format/Permissible Values	Example	Required?
				Minimum element length=1 Maximum element length=20 The valid values are the following: N – No surveillance equipment or equipment unserviceable A – Transponder Mode A C – Transponder Mode A and C E – Transponder – Mode S, including aircraft identification, pressure-altitude and extended squitter (ADS-B) capability H – Transponder – Mode S, including aircraft identification, pressure-altitude and enhanced surveillance capability I - Transponder – Mode S, including aircraft identification, but no pressure-altitude capability L – Transponder – Mode S, including aircraft identification, pressure-altitude, extended squitter (ADS-B) and enhanced surveillance capability P – Transponder – Mode S, including pressure-altitude, but no aircraft identification S – Transponder – Mode S, including both pressure-altitude and aircraft identification capability X – Transponder - Mode S with neither aircraft identification nor pressure-altitude capability B1 – ADS-B with dedicated 1090 mHz ADS-B “out” capability B2 – ADS-B with dedicated 1090 mHz ADS-B “out” and “in” capability U1 - ADS-B “out” capability using UAT U2 - ADS-B “out” AND “IN” capability using UAT V1 - ADS-B “out” capability using VDL Mode 4 V2 - ADS-B “out” and “in” capability using VDL		

DRAFT

Element Name [DBRTFPI]	Element Definition	Type	Complex?	Format/Permissible Values	Example	Required?
				Mode 4 D1 – ADS-C with FANS 1/A capabilities G1 - ADS-C with ATN capabilities		

DRAFT

5.5.1.81 Flight Plan Reconstitution [DBRTFPI] – Diagram

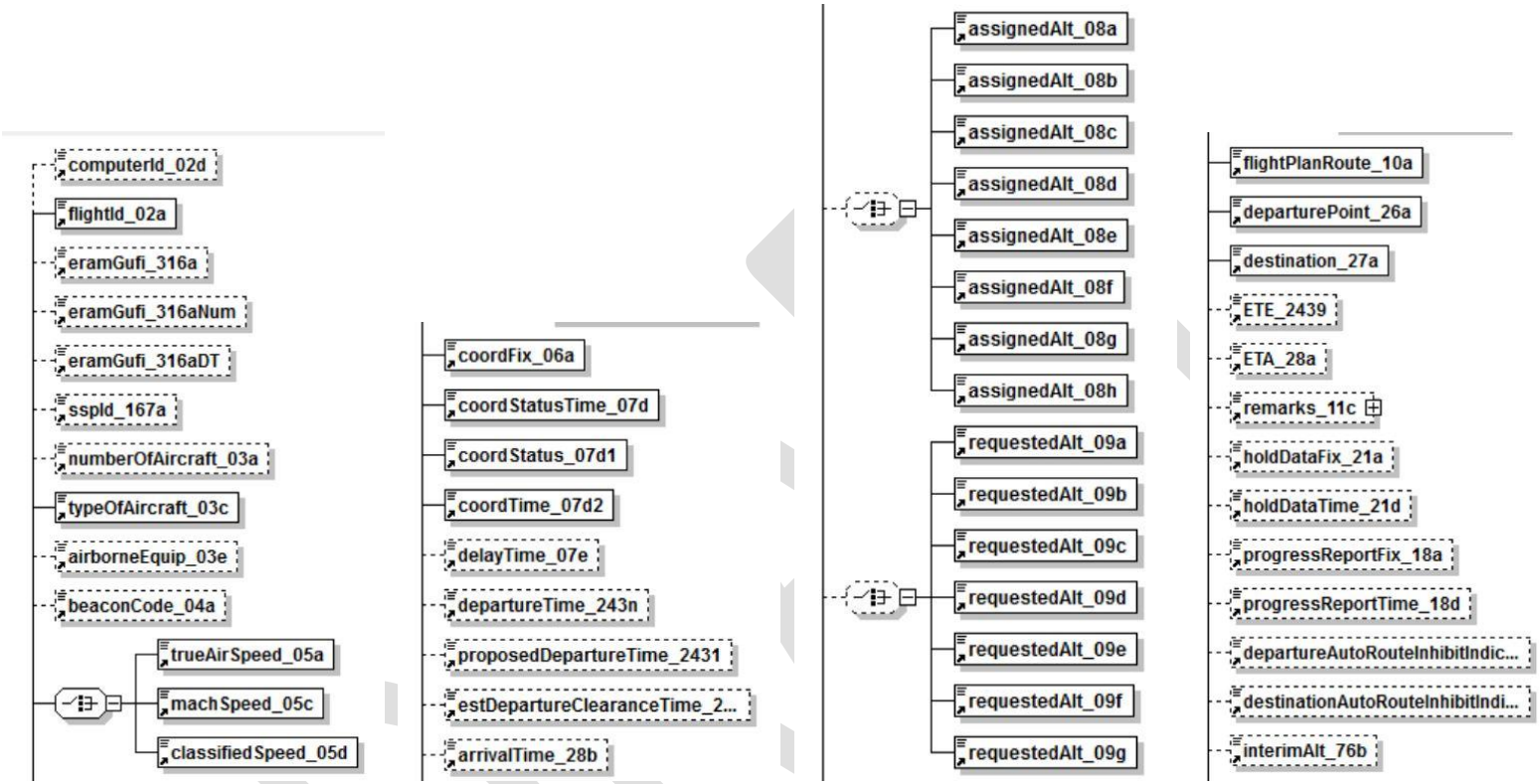

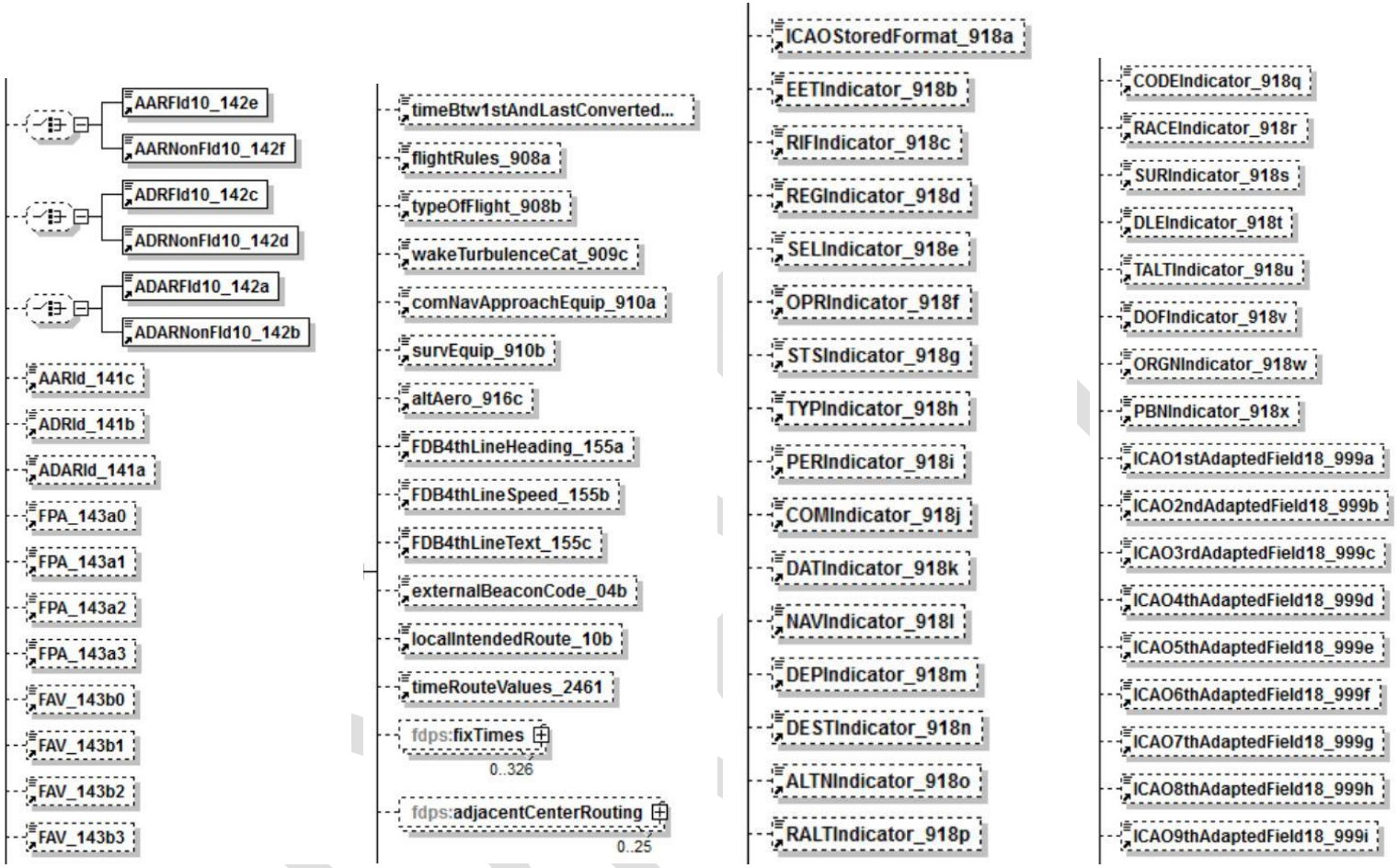
AARFld10_142e
AARNonFld10_142f
ADRFld10_142c
ADRNonFld10_142d
ADARFld10_142a
ADARNonFld10_142b
AARId_141c
ADRId_141b
ADARId_141a
FPA_143a0
FPA_143a1
FPA_143a2
FPA_143a3
FAV_143b0
FAV_143b1
FAV_143b2
FAV_143b3
timeBtw1stAndLastConverted...
flightRules_908a
typeOfFlight_908b
wakeTurbulenceCat_909c
comNavApproachEquip_910a
survEquip_910b
altAero_916c
FDB4thLineHeading_155a
FDB4thLineSpeed_155b
FDB4thLineText_155c
externalBeaconCode_04b
localIntendedRoute_10b
timeRouteValues_2461
fdps:fixTimes
0..326
fdps:adjacentCenterRouting
0..25
ICAOStoredFormat_918a
EETIndicator_918b
RIFIndicator_918c
REGIndicator_918d
SELIndicator_918e
OPRIndicator_918f
STSIndicator_918g
TYPIndicator_918h
PERIndicator_918i
COMIndicator_918j
DATIndicator_918k
NAVIndicator_918l
DEPIndicator_918m
DESTIndicator_918n
ALTNIndicator_918o
RALTIndicator_918p
CODEIndicator_918q
RACEIndicator_918r
SURIndicator_918s
DLEIndicator_918t
TALTIndicator_918u
DOFIndicator_918v
ORGNIndicator_918w
PBNIndicator_918x
ICAO1stAdaptedField18_999a
ICAO2ndAdaptedField18_999b
ICAO3rdAdaptedField18_999c
ICAO4thAdaptedField18_999d
ICAO5thAdaptedField18_999e
ICAO6thAdaptedField18_999f
ICAO7thAdaptedField18_999g
ICAO8thAdaptedField18_999h
ICAO9thAdaptedField18_999i

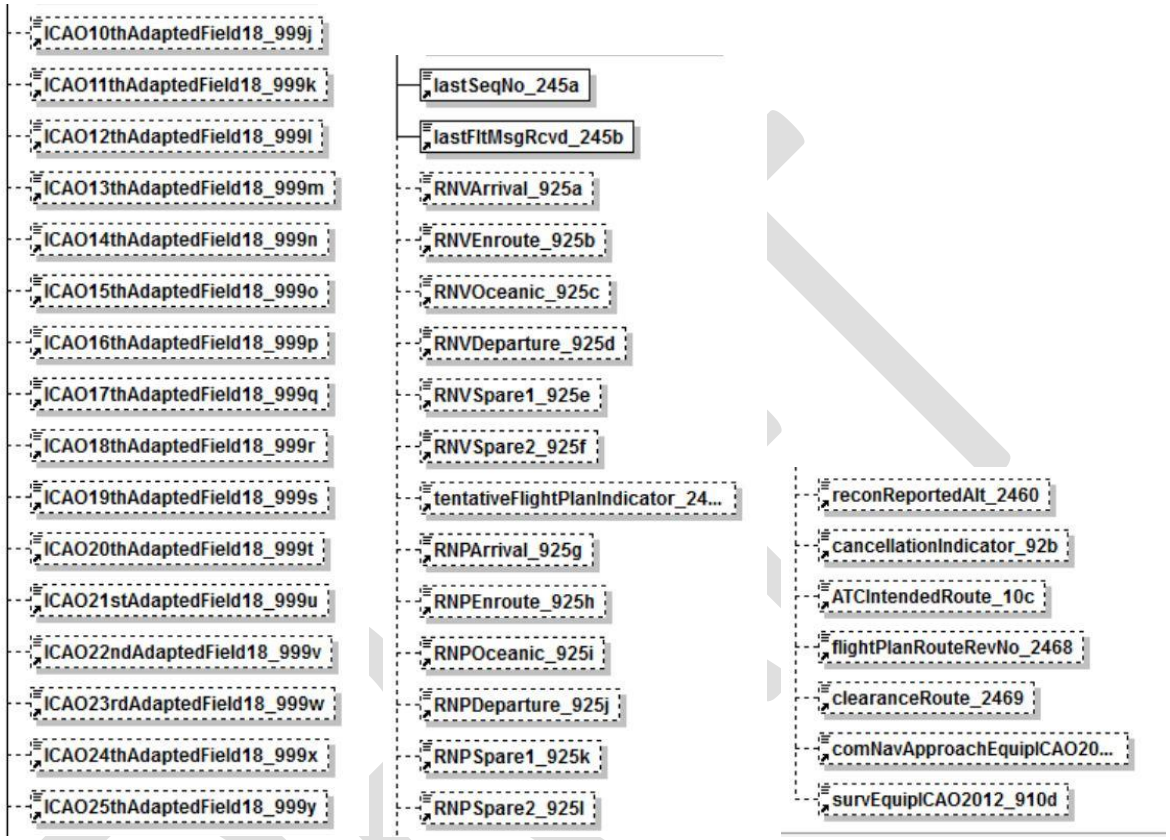

5.5.1.82 Flight Plan Reconstitution Message in FIXM Format [DBRTFPI_FIXM] – Data Elements

The following elements of the DBRTFPI message in Simple XML format are not translated in the FIXM format of the message (DBRTRPI_FIXM):

- eramGufi_316a
- coordStatusTime_07d
- FPA_143a0
- FPA_143a1

- FPA_143a2
- FPA_143a3
- comNavApproachEquip_910a
- survEquip_910b
- timeRouteValues_2461
- fixTimes
- fixTime_68c
- adjacentCenterRouting
- outputRouting_253a
- FAV_29d
- ICAOStoredFormat_918a
- RACEIndicator_918r
- DOFIndicator_918v
- lastSeqNo_245a
- lastFltMsgRcvd_245b
- tentativeFlightPlanIndicator_2459
- flightPlanRouteRevNo_2468
- clearanceRoute_2469

Name [DBRTFPI_FIXM]	Name [DBRTFPI]	Definition	Type	Complex?	Format/Permissible Values	Example	Required?
flight/supplementalData/additionalFlightInformation/nameValue/@name flight/supplementalData/additionalFlightInformation/nameValue/@value	FDPS_SequenceNo	Sequence number assigned by SFDPS to each message it receives from HADDS. The attribute *name* includes the constant string "MSG_SEQ_NO", and the attribute *value* contains the sequence number value.	@name: @value: fb:FreeTextType	No	@name: ”MSG_SEQ_NO” @value: xs:nonNegativeInteger xs:maxInclusive value="999999999"	@name="MSG_SEQ_NO" @value="6860416"	Yes
flight/@system	propSourceSystem	This attribute indicates which SFDPS system generated the message.	fb:ProvenanceSystemType	No	xs:string maxLength=128	FDPS1	Yes

Name [DBRTFPI_FIXM]	Name [DBRTFPI]	Definition	Type	Complex?	Format/Permissible Values	Example	Required?
flight/@timestamp	propRcvdTime	This attribute conatins the time at which the message was received by SFDPS.	ff:TimeType	No	xs:dateTime	2015-12-18T22:19:02.028Z	Yes
flight/@centre	center	This attribute specifies the code of the ARTCC (or FIR) that produced the data.	fb:ProvenanceCentreType	No	xs:string	ZAU	Yes
flight/flightStatus/@fdpsFlightStatus	flightState	This attribute contains the current status of the flight as specified by SFDPS.	nas:SfdpsFlightStatusType	Yes	xs:string "PROPOSED|ACTIVE|COMPLETED|CANCELLED|DROPPED"	ACTIVE	Yes
flight/supplementalData/additionalFlightInformation/nameValue/@name flight/supplementalData/additionalFlightInformation/nameValue/@value	fdpsGufi	The name value pair specifies the SFDPS GUFI, an identifier on every message that positively identifies what flight the message is for.	fb:FreeTextType	No	xs:string @name: "FDPS_GUFI" @value: "us\.fdps\.\d{4}-\d{2}-\d{2}T\d{2}:\d{2}:\d{2}Z\.[A-Za-z0-9/]+"	name="FDPS_GUFI" value="us.fdps.2015-12-18T16:59:10Z.000/14/100"/>	Yes
flight/flightPlan/@identifier	eramGufi_316aFPId	This attribute specifies the unique flight plan identifier.	fb:FreeTextType	No	xs:string "[A-Z]{2}\d{5}[1-7]\d{2}"	"KU68378100"	No
flight/gufi	uuidGufi	This element contains a reference that uniquely identifies a flight and that is independent of any particular system. This reference conforms to the Universal Unique Identifier standard.	fb:GloballyFlightIdentifierType		xs:string "[0-9a-fA-F]{8}\-[0-9a-fA-F]{4}\-4[0-9a-fA-F]{3}\-[89aAbB][0-9a-fA-F]{3}\-[0-9a-fA-F]{12}"	4aaf92be-ac0a-4dba-998f-9e56f5d450b6	Yes
flight/flightIdentification/@aircraftIdentification	flightId_02a	Name used by Air Traffic Services units to identify and communicate with an aircraft.	fb:FlightIdentifierType	No	**"[A-Z0-9]{7}"**	**AAL20**	Yes
flight/supplementalData/additionalFlightInformation/nameValue/@name	flightId_02a	The flight supplemental data is used to indicate that a flight message is a test message, by	*@name:* *@value*: *fb:FreeTextType*	No	Format: *@name:* **"[A-Z0-9_]{1,20}"**	@name = **"SIMULATED_FLIG**	No

Name [DBRTFPI_FIXM]	Name [DBRTFPI]	Definition	Type	Complex?	Format/Permissible Values	Example	Required?
flight/supplementalData/additionalFlightInformation/nameValue/@value		setting the attribute *name* to "**SIMULATED_FLIGHT**" and the attribute *value* to "**true**".			*@value:* **xs:string** **minLength=1, maxLength=100** Permissible values: @name = **"SIMULATED_FLIGHT"** @value = **"true"**	**HT"** @value = **"true"**	
flight/flightIdentification/@computerId	computerId_02d	A unique identification assigned by ERAM to each flight plan.	fb:FreeTextType	No	**"([0-9][A-HJ-NP-Z0-9]{2})|([0-9]{2}[A-HJ-NP-Z0-9])"** The element includes a digit, followed by two alphanumeric characters with the exception of the letters **I** and **O**, such as *ddd, ddL, dLd, dLL*.	**020**	No
flight/flightIdentification/@siteSpecificPlanId	sspId_167a	Site Specific Plan Identifier. It is assigned by Instrument Flight Procedures Automation (IFPA) to uniquely identify a flight plan in each ERAM facility.	fb:CountType	No	**"\d{1,4}"** One to four-digits.	**24**	No
flight/aircraftDescription/@aircraftQuantity	numberOfAircraft_03a	This element includes the number of aircraft for the flight.	fb:countType	No	**"\d{0,2}"** The element consists of zero to two digits.	**3**	No
flight/aircraftDescription/@tfmsSpecialAircraftQualifier	numberOfAircraft_03a- Special Aircraft Indicator	This element includes the Special Aircraft Indicator. It indicates the flight is a heavy jet, B757 or, if not present, a large jet and if the flight is either equipped or not with TCAS. This indicator is used for output purposes such as strip printing and message transfers to other facilities such as Automated Radar Terminal System (ARTS). NOTE	nas:NasSpecialAircraftQualifierType	No	**"HEAVY_JET|TCAS|B757|HEAVY_JET_AND_TCAS"** **"HEAVY_JET"** = Capable of takeoff weights of 300,000 pounds or more **"TCAS"** = Traffic collision avoidance system or traffic alert and collision avoidance system **"B757"** = Controllers are required to apply the special wake turbulence separation criteria for the Boeing 757. **"HEAVY_JET_AND_TCAS"** =	**HEAVY_JET**	No

Name [DBRTFPI_FIXM]	Name [DBRTFPI]	Definition	Type	Complex?	Format/Permissible Values	Example	Required?
		TFMS Special Aircraft Qualifier is a bad fit to Special Aircraft Indicator but no other fields seem to fit.			Capable of takeoff weights of 300,000 pounds or more and traffic collision avoidance system.		
flight/aircraftDescription/aircraftType/icaoModelIdentifier	typeOfAircraft_03c	The ICAO code of the aircraft type.	fb:IcaoAircraftIdentifierType	No	**"[A-Z][A-Z0-9]{1,3}"** The element consists of one letter followed by one to three alphanumeric characters.	**B747**	Yes

DRAFT

Name [DBRTFPI_FIXM]	Name [DBRTFPI]	Definition	Type	Complex?	Format/Permissible Values	Example	Required?
flight/aircraftDescription/@equipmentQualifier	airborneEquip_03e	Airborne equipment qualifier. A value assigned to the aircraft, based on its navigational equipment, whether or not it has a transponder, and if it has a transponder, whether the transponder supports Mode C.	nas:NasAirborneEquipmentQualifierType	No	**" [ABCDGHILMNPSTUVWXYZ]"** The element consists of one alphanumeric character, that can have one of the following values: • "X"= No RVSM, No DME, No transponder • "T"= No RVSM, No DME, Transponder with no mode C • "U"= No RVSM, No DME: Transponder with mode C • "D"= DME: No transponder • "B"= DME: Transponder with no mode C • "A"= DME: Transponder with mode • "M"= TACAN ONLY: No transponder • "N"= TACAN ONLY: Transponder with no mode C • "P"= TACAN ONLY: Transponder with mode C • "C"= "Y"= LORAN,VORDME,INS,RNAV: No transponder • "I"= LORAN,VORDME,INSRNAV: Transponder with mode C • "H"= RVSM, Failed transponder or Failed	**E**	No

DRAFT

Name [DBRTFPI_FIXM]	Name [DBRTFPI]	Definition	Type	Complex?	Format/Permissible Values	Example	Required?

					Mode C capability
					• "S=ADVANCED RNAV, TRANSPONDER, MODE C: FMS with DMEDME position updating
					• "G"= ADVANCED RNAV, TRANSPONDER, MODE C: Global Navigation Satellite System (GNSS), including GPS or Wide Area Augmentation System (WAAS), with enroute and terminal capability
					• "V"= ADVANCED RNAV, TRANSPONDER, MODE C: Required Navigational Performance (RNP). The aircraft meets the RNP type prescribed for the route segments, routes and/or area concerned.
					• "Z"= REDUCED VERTICAL SEPARATION MINIMUM (RVSM): E with RVSM
					  • "L"= REDUCED VERTICAL SEPARATION MINIMUM (RVSM): G with RVSM
					  • "W"= REDUCED VERTICAL SEPARATION MINIMUM		

DRAFT

Name [DBRTFPI_FIXM]	Name [DBRTFPI]	Definition	Type	Complex?	Format/Permissible Values	Example	Required?
					(RVSM): RVSM		
flight/enRoute/beaconCodeAssignment/currentBeaconCode	beaconCode_04a	Current assigned beacon code.	fb:BeaconCodeType	No	"[0-7]{4}" The element includes four octal digits (i.e. 0-7). When the last two digits of the four-digits are zero, the beacon code is a non-discrete code. A discrete code is any code not ending in 00.	Non-discrete VFR code: **2101**	Yes
flight/requestedAirspeed/nasAirspeed flight/requestedAirspeed/@uom	trueAirSpeed_05a machSpeed_05c	The aircraft speed expressed in either true airspeed or mach.	nasAirspeed: ff: TrueAirSpeedOrMachType uom: ff:AirspeedMeasureType	No	nasAirspeed: **"xs:double"** uom: **"KILOMETERS_PER_HOUR|KNOTS|MACH"** This element is required if requestedAirspeed/classifed not included in the message.	nasAirspeed: **540** uom: **KNOTS**	Yes
flight/requestedAirspeed/classified	classifiedSpeed_05d	Classified Speed Indicator. It indicates that the speed for this flight is classified and is not to be recorded.	nas:ClassifiedSpeedIndicatorType	No	**"CLASSIFIED"** This element is required if requestedAirspeed/nasAirspeed not included in the message.	**CLASSIFIED**	Yes
flight/coordination/coordinationFix/@fix	coordFix_06a	The fix to be used in conjunction with the CoordinationTime so processing for this flight can be synchronized for the next sector/facility. It coordinates the flight plan with the aircraft position.	fb:SignificantPointType (abstract type) *fb:FixPointType/* *ff:GeographicalLocationType/* *fb:RelativePointType*	Yes	-*fb:FixPointType* **"[A-Z0-9]{2,5}"** - *ff:GeographicalLocationType* List of two **xs:double** (latitude followed by longitude) - *fb:RelativePointType* - fix: **"[A-Z0-9]{2,5}"** - distance: *ff:DistanceType* **xs:double** - radial: *fb:DirectionType* **xs:double** minInclusive = 0	**KBOS**	Yes

DRAFT

Name [DBRTFPI_FIXM]	Name [DBRTFPI]	Definition	Type	Complex?	Format/Permissible Values	Example	Required?
					maxInclusive =360		
flight/coordination/@coordinationTimeHandling	coordStatus_07d1	The indicator for the type of Coordination Time.	nas:CoordinationTimeType	No	**"(P|D|E|A)"** **"P"** = Proposed flight plan. **"D"** = Aircraft has departed from the departure airport. **"E"** = Active aircraft. **"A"** = Aircraft arrived at the destination airport.	**P**	Yes
flight/coordination/@coordinationTime	coordTime_07d2	Coordination Time: the time to be used in conjunction with the Coordination Fix so processing for this flight can be synchronized for the next sector/facility.	ff:TimeType	No	**xs:dateTime**	**2015-06-20T20:17:52**	Yes
flight/coordination/@delayTimeToAbsorb	delayTime_07e	Delay time to absorb: indicates the amount of time that needs to be absorbed during the flight. It is corrective action for meeting the goal of Estimated Departure Clearance Time (EDCT), when the flight is already active and needs to arrive later than originally planned.	ff:DurationTime	No	**xs:duration**	**PT30M**	No
flight/departure/runwayPositionAndTime/runwayTime/actual/@time	departureTime_243n	This element specifies the actual departure time in UTC.	ff:TimeType	No	**xs:dateTime**	**2014-06-20T20:17:52**	No
flight/departure/runwayPositionAndTime/runwayTime/estimated/@time	proposedDepartureTime_2431	This element specifies the proposed departure time.	ff:TimeType	No	**xs:dateTime**	**2014-06-20T20:17:52**	No
flight/departure/runwayPositionAn	estDepart	This element specifies the	ff:TimeType	No	**xs:dateTime**	**2014-06-**	No

DRAFT

Name [DBRTFPI_FIXM]	Name [DBRTFPI]	Definition	Type	Complex?	Format/Permissible Values	Example	Required?
dTime/runwayTime/controlled/@time	ureClearanceTime_2432	EDCT.				**20T20:27:52**	
flight/arrival/runwayPositionAndTime/runwayTime/actual/@time	arrivalTime_28b	This element specifies the actual arrival time.	ff:TimeType	No	**xs:dateTime**	**2014-06-20T22:27:52**	No
flight/assignedAltitude/simple flight/assignedAltitude/simple/@uom	assignedAlt_08a	Simple altitude: single measurement above reference point. It represents the only NAS altitude that maps directly to the core ICAO altitude types. Only one of the altitude elements *simple*, *vfrOnTop*, *vfrOnTopPlus*, *block*, *above*, *altFixAlt*, *vfr*, *vfrPlus* may be included in the message. The attribute *uom* specifies the altitude unit of measurement.	nas:SimpleAltitudeType @uom: ff:AltitudeMeasureType	Yes	**"xs:double"** **@uom:** "**FEET|METERS**"	Assigned altitude of 34,000 feet: **34000** *Uom*: **FEET**	No
flight/assignedAltitude/vfrOnTop	assignedAlt_08b	The presence of this element indicates VFR-ON-Top. It specifies that the aircraft is flying above the clouds in VFR conditions. Only one of the altitude elements *simple*, *vfrOnTop*, *vfrOnTopPlus*, *block*, *above*, *altFixAlt*, *vfr*, *vfrPlus* may be included in the message.	Nas:VfrOnTopAltitudeType	Yes	Empty element.		No
flight/assignedAltitude/vfrOnTopPlus flight/assignedAltitude/vfrOnTopPlus/@uom	assignedAlt_08c	VFR-ON-Top with altitude. It represents an Instrument Flight Rules (IFR) flight operating above the clouds in	nas:VfrOnTopPlusAltitudeType @uom: ff:AltitudeMeasur	No	**"xs:double"** @uom: **"FEET|METRES"**	Aircraft flying VFR-ON-Top at	No

Name [DBRTFPI_FIXM]	Name [DBRTFPI]	Definition	Type	Complex?	Format/Permissible Values	Example	Required?
		VFR conditions at the specified assigned altitude. Only one of the altitude elements *simple*, *vfrOnTop*, *vfrOnTopPlus*, *block*, *above*, *altFixAlt*, *vfr*, *vfrPlus* may be included in the message.	eType			25,000 feet: **25000** *uom*: **FEET**	
flight/assignedAltitude/block/above flight/assignedAltitude/block/above/@uom	assignedAlt_08d	The bottom level of the assigned block of altitudes for the flight to fly at. Only one of the altitude elements *simple*, *vfrOnTop*, *vfrOnTopPlus*, *block*, *above*, *altFixAlt*, *vfr*, *vfrPlus* may be included in the message.	ff:AltitudeType @uom: ff:AltitudeMeasureType	Yes	**"xs:double"** **@**uom: **"FEET|METRES**	*above:* **8000** *uom:* **FEET**	No
flight/assignedAltitude/block/below flight/assignedAltitude/block/below/@uom	assignedAlt_08d	The top level of the assigned block of altitudes for the flight to fly at. Only one of the altitude elements *simple*, *vfrOnTop*, *vfrOnTopPlus*, *block*, *above*, *altFixAlt*, *vfr*, *vfrPlus* may be included in the message.	ff:AltitudeType @uom: ff:AltitudeMeasureType	Yes	**"xs:double"** @uom: **"FEET|METRES"**	*below:* **14000** *uom:* **FEET**	No
flight/assignedAltitude/above flight/assignedAltitude/above/@uom	assignedAlt_08e	Element used for IFR flights operating above a specified altitude. Only one of the altitude elements *simple*, *vfrOnTop*, *vfrOnTopPlus*, *block*, *above*, *altFixAlt*, *vfr*, *vfrPlus* may be included in the message.	nas:AboveAltitudeType @uom: ff:AltitudeMeasureType	Yes	**"xs:double"** @uom: **"FEET|METRES"**	Aircraft is flying above 60,000 feet: **60000** **uom:** **FEET**	No
flight/assignedAltitude/altFixAlt/point	assignedAlt_08f	*assignedAltitude/altFixAlt* element is defined as an altitude prior to a specified fix, the specified fix itself, and altitude post specified fix. The	fb:SignificantPointType (abstract type) *fb:FixPointType/* *ff:GeographicalLo*	Yes	- *fb:FixPointType* **"[A-Z0-9]{2,5}"** - *ff:GeographicalLocationType* List of two **xs:double** (latitude followed by longitude)	**MDG**	No

Name [DBRTFPI_FIXM]	Name [DBRTFPI]	Definition	Type	Complex?	Format/Permissible Values	Example	Required?
		element *altFixAlt/point* defines the specified fix associated with the altitude. The fix cannot be the departure or arrival point. Only one of the altitude elements *simple*, *vfrOnTop*, *vfrOnTopPlus*, *block*, *above*, *altFixAlt*, *vfr*, *vfrPlus* may be included in the message.	*cationType/ fb:RelativePointType*		- *fb:RelativePointType* - fix: **"[A-Z0-9]{2,5}"** - distance: *ff:DistanceType* **xs:double** - radial: *fb:DirectionType* **xs:double** minInclusive = 0 maxInclusive =360		
flight/assignedAltitude/altFixAlt/pre flight/assignedAltitude/altFixAlt/pre/@uom	assignedAlt_08f	*assignedAltitude/altFixAlt* element is defined as an altitude prior to a specified fix, the specified fix itself, and altitude post specified fix. The element *altFixAlt/pre* defines the altitude before the specified fix. Only one of the altitude elements *simple*, *vfrOnTop*, *vfrOnTopPlus*, *block*, *above*, *altFixAlt*, *vfr*, *vfrPlus* may be included in the message.	ff:AltitudeType @uom: ff:AltitudeMeasureType	Yes	**"xs:double"** @uom: **"FEET|METRES"**	**240000** **uom:** **FEET**	No
flight/assignedAltitude/altFixAlt/post flight/assignedAltitude/altFixAlt/post/@uom	assignedAlt_08f	*assignedAltitude/altFixAlt* element is defined as an altitude prior to a specified fix, the specified fix itself, and altitude post specified fix. The element *altFixAlt/pre* defines the altitude after the specified fix. Only one of the altitude elements *simple*, *vfrOnTop*, *vfrOnTopPlus*, *block*, *above*, *altFixAlt*, *vfr*, *vfrPlus* may be	ff:AltitudeType @uom: ff:AltitudeMeasureType	Yes	**"xs:double"** @uom: **"FEET|METRES"**	**22000** **uom:** **FEET**	No

DRAFT

Name [DBRTFPI_FIXM]	Name [DBRTFPI]	Definition	Type	Complex?	Format/Permissible Values	Example	Required?
		included in the message.					
flight/assignedAltitude/vfr	assignedAlt_08g	Its presence in the message specifies that the flight is flying Visual Flight Rules (VFR). Only one of the altitude elements *simple*, *vfrOnTop*, *vfrOnTopPlus*, *block*, *above*, *altFixAlt*, *vfr*, *vfrPlus* may be included in the message.	nas:VfrAltitudeType	Yes	**Empty element**		No
flight/assignedAltitude/vfrPlus flight/assignedAltitude/vfrPlus/@uom	assignedAlt_08h	It is used to specify that the flight is flying VFR at a specified altitude. Only one of the altitude elements *simple*, *vfrOnTop*, *vfrOnTopPlus*, *block*, *above*, *altFixAlt*, *vfr*, *vfrPlus* may be included in the message.	nas:VfrPlusAltitudeType @uom: ff:AltitudeMeasureType	Yes	**"xs:double"** @uom: **"FEET|METRES"**	The aircraft is flying VFR at 7,500 feet: **7500** uom: **FEET**	No
flight/requestedAltitude/simple flight/requestedAltitude/simple/@uom	requestedAlt_09a	The element is used to specify requested altitude. Only one of the seven requested altitude elements may be included in a proposed flight message. Only one of the requestedAltitude elements *simple*, *vfrOnTop*, *vfrOnTopPlus*, *block*, *above*, *altFixAlt*, *vfr*, *vfrPlus* may be included in the message.	nas:SimpleAltitudeType @uom: ff:AltitudeMeasureType	Yes	**"xs:double"** @uom: "**FEET|METRES**"	Aircraft is requesting to fly at 34,000 feet altitude: **34000**	No
flight/requestedAltitude/vfrOnTop	requestedAlt_09b	This element specifies an IFR flight requesting to operate above the clouds in VFR conditions. Only one of the requestedAltitude elements *simple*, *vfrOnTop*,	nas:VfrOnTopAltitudeType	Yes	Empty element.	The presence of this empty element indicates VFR-ON-	No

Name [DBRTFPI_FIXM]	Name [DBRTFPI]	Definition	Type	Complex?	Format/Permissible Values	Example	Required?
		vfrOnTopPlus, *block*, *above*, *altFixAlt*, *vfr*, *vfrPlus* may be included in the message.				Top.	
flight/requestedAltitude/vfrOnTopPlus flight/requestedAltitude/vfrOnTopPlus/@uom	requestedAlt_09c	VFR-ON-Top with altitude. It represents an Instrument Flight Rules (IFR) flight requesting to operate above the clouds in VFR conditions at the specified altitude. Only one of the requestedAltitude elements *simple*, *vfrOnTop*, *vfrOnTopPlus*, *block*, *above*, *altFixAlt*, *vfr*, *vfrPlus* may be included in the message.	nas:VfrOnTopPlusAltitudeType @uom: ff:AltitudeMeasureType	Yes	**"xs:double"** @uom: **"FEET|METRES"**	Aircraft requesting to fly VFR-ON-Top at 25,000 feet: **25000** uom: **feet**	No
flight/requestedAltitude/above flight/requestedAltitude/above/@uom	requestedAlt_09d	Element used for IFR flights requesting to operate above a specified altitude. Only one of the requestedAltitude elements *simple*, *vfrOnTop*, *vfrOnTopPlus*, *block*, *above*, *altFixAlt*, *vfr*, *vfrPlus* may be included in the message.	nas:AboveAltitudeType @uom: ff:AltitudeMeasureType	Yes	**"xs:double"** @uom: **"FEET|METRES"**	Aircraft is requesting to fly above 60,000 feet: **60000** **uom:** **FEET**	No
flight/requestedAltitude/block/above flight/requestedAltitude/block/above/@uom	requestedAlt_09e	The bottom level of the requested block of altitudes for the flight to fly at. Only one of the requestedAltitude elements *simple*, *vfrOnTop*, *vfrOnTopPlus*, *block*, *above*, *altFixAlt*, *vfr*, *vfrPlus* may be included in the message.	ff:AltitudeType @uom: ff:AltitudeMeasureType	Yes	**"xs:double"** @uom: **"FEET|METRES"**	*above:* **8000** *uom:* **FEET**	No
flight/requestedAltitude/block/below flight/requestedAltitude/block/belo	requestedAlt_09e	The top level of the requested block of altitudes for the flight to fly at.	ff:AltitudeType @uom: ff:AltitudeMeasur	Yes	**"xs:double"** @uom:	*below:* **14000**	No

DRAFT

Name [DBRTFPI_FIXM]	Name [DBRTFPI]	Definition	Type	Complex?	Format/Permissible Values	Example	Required?
w/@uom		Only one of the requestedAltitude elements *simple*, *vfrOnTop*, *vfrOnTopPlus*, *block*, *above*, *altFixAlt*, *vfr*, *vfrPlus* may be included in the message.	eType		**"FEET|METRES"**	*uom:* **FEET**	
flight/requestedAltitude/vfr	requestedAlt_09f	Its presence in the message specifies that the flight is requesting to fly Visual Flight Rules (VFR). Only one of the requestedAltitude elements *simple*, *vfrOnTop*, *vfrOnTopPlus*, *block*, *above*, *altFixAlt*, *vfr*, *vfrPlus* may be included in the message.	nas:VfrAltitudeType	Yes	Empty element		No
flight/requestedAltitude/vfrPlus flight/requestedAltitude/vfrPlus/@uom	requestedAlt_09g	The element used to represent a flight requesting to fly VFR at a specified altitude.	nas:VfrPlusAltitudeType	Yes	**"xs:double"** uom: **"FEET|METRES"**	The aircraft is requesting to fly VFR at 7,500 feet: **7500** uom: **feet**	No
flight/agreed/route/@nasRouteText	flightPlanRoute_10a	This attribute specifies the trajectory followed by the airplane from the departure point to the arrival point, based on the fixes and routes along that trajectory.	fb:FreeTextType	No	**"[A-Z0-9+/*]{2,12}_?\.[A-Z0-9+\./]*\.[A-Z0-9+/*]{2,12}_?(/\d{4})?"** The element format consists of a string that includes fixes and routes along the trajectory flown by the airplane. The fixes and routes are specified using the FIX.ROUTE.FIX format, where either element can be implied,	OKC.V14S.TUL.TUL090..FYV270.FYV	Yes

DRAFT

Name [DBRTFPI_FIXM]	Name [DBRTFPI]	Definition	Type	Complex?	Format/Permissible Values	Example	Required?
					such as FIX..FIX, or ROUTE..ROUTE.		
flight/departure/@departurePoint	departure Point_26a	This attribute is used to specify the first point or other initial entity where the air traffic control/management system route starts.	fb:FreeTextType	No	xs:string minLength=2, maxLength=12 **"([A-Z0-9]{2,5}) | ([A-Z0-9]{2,5}\d{6}) | (\d{4}[A-Z]?/\d{4,5}[A-Z]?)"** Any of the standard ways to represent a fix can be used for this element (fix name, lat/long, or fix-radial-distance), including the standard airport designators.	**AB** **DFW** **KDFW** **SHP090015** **ATOKA300040** **3500N/04000W**	Yes
flight/arrival/@arrivalPoint	destination_27a	The final point or other final entity where the air traffic control/management system route terminates.	fb:FreeTextType	No	**xs:string** minLength=2, maxLength=12 **"([A-Z0-9]{2,5}) | ([A-Z0-9]{2,5}\d{6}) | (\d{4}[A-Z]?/\d{4,5}[A-Z]?)"** Any of the standard ways to represent a fix can be used for this element (fix name, lat/long, or fix-radial-distance), including the standard airport designators.	**AB** **DFW** **KDFW** **SHP090015** **ATOKA300040** **3500N/04000W**	Yes
flight/agreed/route/@flightDuration	ETE_2439	The total estimated time en route (ETE), from the departure (runway) to the arrival at the destination (runway). For an airfile flight, this is the total estimated time en route, from the route start point to the arrival at the destination (runway).	ff:DurationType	No	xs:duration	**PT2H30M** The above value specifies an ETE of 2 hours and 30 minutes.	No
flight/arrival/runwayPositionAndTime/runwayTime/estimated/@time	ETA_28a	This attribute specifies the most reliable estimated time when the aircraft will touch down on the runway at the	ff:TimeType	No	xs:dateTime	**2014-06-20T22:27:52**	No

DRAFT

Name [DBRTFPI_FIXM]	Name [DBRTFPI]	Definition	Type	Complex?	Format/Permissible Values	Example	Required?
		flight plan destination.					
flight/flightPlan/@flightPlanRemarks	remarks_11c	This attribute contains the NAS Flight Plan Field 11 remarks processed by the Traffic Flow Management System (TFMS) and used for TFM purposes.	fb:FreeTextType	No	The string is from 1 to 4,096 characters in length.	**OAIR EVAC AMG/N0482F290 SQT/N0479F310 JOL+**	No
flight/agreed/route/holdFix	holdDataFix_21a	This element specifies the position location for the flight to hold along the filed route of flight. The attribute flight/status/@airborneHold is set to "**AIRBORNE_HOLD**" when the element flight/agreed/route/holdFix is included.	fb:SignificantPointType (abstract type) *fb:FixPointType/ ff:GeographicalLocationType/ fb:RelativePointType*	Yes	- *fb:FixPointType* **"[A-Z0-9]{2,5}"** - *ff:GeographicalLocationType* List of two **xs:double** (latitude followed by longitude) - *fb:RelativePointType* - fix: **"[A-Z0-9]{2,5}"** - distance: *ff:DistanceType* **xs:double** - radial: *fb:DirectionType* **xs:double** minInclusive = 0 maxInclusive =360	**KBOS** flight/status/@airborneHold is always set to "**AIRBORNE_HOLD**" if holdFix specified.	No
flight/status/@airborneHold	holdDataFix_21a	This attribute specifies whether or not the aircraft is in an airborne hold.	fx:AirborneHoldIndicatorType	No	**"AIRBORNE_HOLD"** If the aircraft is in an airborne hold, the holdFix element is included in the message and the attribute airboneHold is set to"**AIRBORNE_HOLD**".	**"AIRBORNE_HOLD"**	No
flight/enRoute/expectedFurtherClearanceTime/@time	holdDataTime_21d	This attribute specifies the time the flight can expect further clearance at the holding location specified in the element flight/agreed/route/holdFix.	ff:TimeType	No	xs:dateTime	**2014-06-20T20:17:52**	No

DRAFT

Name [DBRTFPI_FIXM]	Name [DBRTFPI]	Definition	Type	Complex?	Format/Permissible Values	Example	Required?
		This element can only be included in the HH_FIXM messages if the element flight/agreed/route/holdFix is also included.					
flight/enRoute/position/position	progressReportFix_18a	This element specifies the position location report of the flight along the filed route of flight and associated data of the aircraft.	fb:SignificantPointType (abstract type) *fb:FixPointType/ ff:GeographicalLocationType/ fb:RelativePointType*	Yes	- *fb:FixPointType* **"[A-Z0-9]{2,5}"** - *ff:GeographicalLocationType* List of two **xs:double** (latitude followed by longitude) - *fb:RelativePointType* - fix: **"[A-Z0-9]{2,5}"** - distance: *ff:DistanceType* **xs:double** - radial: *fb:DirectionType* **xs:double** minInclusive = 0 maxInclusive =360	**KBOS**	Yes
flight/enRoute/position/@positionTime	progressReportTime_18d	This attribute specifies the time associated with the current position of an active flight from the radar surveillance report or progress report. The current position is specified in the element *flight/enRoute/position/position*, above.	ff:TimeType	No	xs:dateTime	**2014-10-31T22:30:00**	Yes
flight/agreed/route/@inhibitAdaptedDepRoutes	departureAutoRouteInhibitIndicator_244g	This attribute specifies whether the adapted departure routes from the departure airport are inhibited for use for the route of the flight.	nas:InhibitAdaptedDepRoutesIndicatorType	No	**"INHIBIT_ADAPTED_DEPARTURE_ROUTES"**	**INHIBIT_ADAPTED_DEPARTURE_ROUTES**	No

DRAFT

Name [DBRTFPI_FIXM]	Name [DBRTFPI]	Definition	Type	Complex?	Format/Permissible Values	Example	Required?
flight/agreed/route/@inhibitAdaptedArrRoutes	destinationAutoRouteInhibitIndicator_244h	This attribute specifies whether the adapted arrival routes are inhibited for use for the route of the flight.	nas:InhibitAdaptedArrRoutesIndicatorType	No	**"INHIBIT_ADAPTED_ARRIVAL_ROUTES"**	**INHIBIT_ADAPTED_ARRIVAL_ROUTES**	No
flight/interimAltitude	interimAlt_76bT	This element specifies the interim altitude the flight is cleared to maintain different from that in the flight plan.	nas:SimpleAltitudeType	Yes	xs:double	interimAltitude of 240,000 feet: **240000** uom=**FEET**	No
flight/interimAltitude/@uom	interimAlt_76bT	This attribute specifies the unit of measure for the *interimAltitude* element: FEET/METRES.	*ff:AltitudeMeasureType*	No	**"FEET|METRES"**	**FEET**	Yes
flight/agreed/route/nasadaptedArrivalRoute/@nasRouteAlphanumeric	AARFld10_142e AARNonFld10_142f	This element includes the Adapted Arrival Route (AAR) preferential route in Field 10 or non-Field 10 formats.	fb:FreeTextType	No	**"([A-Z0-9\./]{4,97}) | ([A-Z0-9\./\+]{4,97})"** Field 10 format: **"[A-Z0-9\./]{4,97}"** Non-Field 10 format: **"[A-Z0-9\./\+]{4,97}"** A "+" delimiter precedes and follows the non-Field10 elements.	Field 10 format: **./.BLEUZ.RYTHM3.** Non-Field 10 format: **.J25.CRP+LISSE6+** Notice the non-Field10 substring that is enclosed between "+" characters.	No

DRAFT

Name [DBRTFPI_FIXM]	Name [DBRTFPI]	Definition	Type	Complex?	Format/Permissible Values	Example	Required?
flight/agreed/route/adaptedDepartureRoute/@nasRouteAlphanumeric	ADRFld10_142c ADRNonFld10_142d	Adapted Departure Route (ADR) preferential route in Field 10 or non-Field 10 format.	fb:FreeTextType	No	**"([A-Z0-9\./*]{4,84}) | ([A-Z0-9\./\+ -]{4,84})"** Field 10 format: **"([A-Z0-9\./*]{4,84}"** Non-Field 10 format: **"[A-Z0-9\./\+ -]{4,84}"** A "+" delimiter precedes and follows the non-Field10 elements.	Field 10 format: **.ALAMO6 .HENLY.J131.FUZ.J105.** Non-Field 10 format: **+RV J25+CRP.LISSE6**	No
flight/agreed/route/adaptedArrivalDepartureRoute/@nasRouteAlphanumeric	ADARFld10_142a ADARNonFld10_142b	This element contains the adapted ADAR preferential route in Field 10 or non-Field 10 formats. The Preferential Route Alphanumeric are used to control the flow and separation of traffic departing and arriving at designated airports. An ADAR has the complete preferential routing from the departure airport to the arrival airport.	fb:FreeTextType	No	**"([A-Z0-9\./]{4,44})|([A-Z0-9\./\+]{4,44})"** The Field10 format is: **"[A-Z0-9\./]{4,44}"** The non-Field10 format is: **"[A-Z0-9\./\+]{4,44}"** A "+" delimiter precedes and follows the non-Field10 elements.	Field10 format: SX2.PSX.V20.CRP Non-Field10 format: +LISSE6+ +TS1 MEM270 LIT050+	No
flight/agreed/route/nasadaptedArrivalRoute/@nasRouteIdentifier	AARId_141c	If required for the flight, this element specifies the Adapted Arrival Route (AAR) identifier, used to internally identify it.	fb:FreeTextType	No	**[A-Z0-9/\-\?\(\)\.,=\+]{5}"** The format consists of five characters.	PA001	No
flight/agreed/route/adaptedDepartureRoute/@nasRouteIdentifier	ADRId_141b	If required for the flight, this element specifies the Adapted Departure Route (ADR) identifier, used to internally identify it.	fb:FreeTextType	No	**[A-Z0-9/\-\?\(\)\.,=\+]{5}"** The format consists of five characters.	PD001	No
flight/agreed/route/adaptedArrivalDepartureRoute/@nasRouteIdentifier	ADARId_141a	If required for the flight, this element specifies the Adapted Departure Arrival Route	fb:FreeTextType	No	**[A-Z0-9/\-\?\(\)\.,=\+]{5}"** The format consists of five characters.	DA001	No

DRAFT

Name [DBRTFPI_FIXM]	Name [DBRTFPI]	Definition	Type	Complex?	Format/Permissible Values	Example	Required?
		(ADAR)/ Adapted Departure Route (ADR)/ Adapted Arrival Route (AAR) identifier, used to internally identify an adapted departure/ arrival/ departure arrival route.					
flight/agreed/route/nasadaptedArrivalRoute/nasFavNumber	FAV_143b0 FAV_143b1 FAV_143b2 FAV_143b3	This element includes a list of Fixed Airspace Volume (FAV) numbers for the FAVs containing the first four Adapted Arrival Route (AAR) fixes.	list itemType="fb:FreeTextType"	No	**"\d{4}([ ]\d{4}){0,3}"**	7601 7602	No
flight/agree/route/@initialFlightRules	flightRules_908a	The regulation, or combination of regulations, that governs all aspects of operations under which the pilot plans to fly.	fb:FlightRulesType	No	**"IFR|VFR"**	**IFR**	No
flight/@flightType	typeOfFlight_908b	This element contains an indication of the rule under which an air traffic controller provides categorical handling of a flight.	fx:TypeOfFlightType	No	**"MILITARY|GENERAL|NON_SCHEDULED| SCHEDULED|OTHER"**	**SCHEDULED**	No
flight/aircraftDescription/@wakeTurbulence	wakeTurbulenceCat_909c	This element specifies the ICAO classification of the aircraft wake turbulence, based on the maximum certified take off mass.	fx:WakeTurbulenceCategoryType	No	**"[JHML]"** , where: **J** = Super Heavy **H** = Heavy **M** = Medium **L** = Light	H	No
flight/arrival/arrivalAerodromeAlternate/@code or flight/arrival/arrivalAerodromeAlternate/point	altAero_916c or ALTNIndicator_918o	ICAO designator or the name of an alternate aerodrome to which an aircraft may proceed, should it become either impossible or inadvisable to	*arrivalAerodromeAlternate* is of abstract type: *fb:AerodromeReferenceType*	Yes	The aerodrome is specified using its 4-letter ICAO name if it has one. If no ICAO location indicator has been allocated, the aerodrome is identified by its	*@code*: **KDFW** *@name*: **MILLSPAW FARM**	No

DRAFT

Name [DBRTFPI_FIXM]	Name [DBRTFPI]	Definition	Type	Complex?	Format/Permissible Values	Example	Required?
flight/arrival/arrivalAerodromeAlternate/@name		land at the original destination aerodrome or an alternate destination location. More than one alternate arrival aerodromes may be specified for a flight.	that can instantiate as: *ff:IcaoAerodromeReferenceType* if the aerodrome has an ICAO designator, or: *fb:UnlistedReferenceType,* otherwise. Type of *arrivalAerodromeAlternate/@code*: *ff:IcaoAerodromeReferenceType* Type of *arrivalAerodrome/point:* *fb:SignificantPointType* (abstract type that can instantiate as: *fb:FixPointType/ ff:GeographicalLocationType/ fb:RelativePointType*) Type of *arrivalAerodromeAlternate/@name*: *fb:AerodromeNameType*		name ("Dallas Fort Worth") or a 3-character IATA Alternate Identifier ("DFW") and a significant point consisting of one of the following data: • geographic location (latitude and longitude), or • location of a fix specified by name, or • fix/radial/distance (FRD). If the aerodrome has an ICAO designator, the attribute *@code* includes the ICAO code according to the format: **"[A-Z]{4}"** Otherwise, if no ICAO location has been allocated, the unlisted aerodrome is identified by its name (optionally) plus a significant point according to the following format: -*arrivalAerodrome/@name*: **xs:string** -for *arrivalAerodrome/point* there are three ways to specify the significant point*:* *1)* location of fix specified by name *(* type f*b:FixPointType)*: **"[A-Z0-9]{2,5}"** *2)* geographic location specified by latitude and longitude *(ff:GeographicalLocationType):* - list of two **xs:double**	*point/@fix:* **HBZ** *point/distance (@uom* **NAUTICAL_MILES): 10.0** *point/radial (@uom* **DEGREES)**: **236.0**	

DRAFT

Name [DBRTFPI_FIXM]	Name [DBRTFPI]	Definition	Type	Complex?	Format/Permissible Values	Example	Required?
					(latitude followed by longitude) 3) fix-radial-distance (*fb:RelativePointType):* (a) fix: **"[A-Z0-9]{2,5}"** (b) distance (*ff:DistanceType*): **xs:double** (c) radial (*fb:DirectionType*): **xs:double** minInclusive = 0 maxInclusive =360		
flight/enRoute/cleared/@clearanceHeading	FDB4thLineHeading_155a	This element contains the En-Route Controller Clearance heading as entered by the controller in the fourth line in Full Data Block.	fb:FreeTextType	No	**"[A-Z0-9]{1,4}"**	**075** **H075**	No
flight/enRoute/cleared/@clearanceSpeed	FDB4thLineSpeed_155b	This element contains the En-Route Controller Clearance speed as entered by the controller in the fourth line in Full Data Block.	fb:FreeTextType	No	**"[A-Z0-9+-\.]{1,4}"**	280+ S260 M83+ .75-	No
flight/enRoute/cleared/@clearanceText	FDB4thLineText_155c	This element contains the free-from text as entered by the En-Route Controller, to be associated with the Clearance in the fourth line in Full Data Block.	fb:FreeTextType	No	**"[A-Z0-9+-=*/_;\.,\\\|^v]{1,8}"**	-BUFFI NOBBL BLVNS	No
flight/enRoute/beaconCodeAssignment/reassignedBeaconCode	externalBeaconCode_04b	Reassigned beacon code. Identifies the downstream unit that assigned the next beacon code, in the case the beacon code was already in use by	fb:BeaconCodeType	No	**"[0-7]{4}"** It has the same format as currentBeaconCode.	**3434**	No

Name [DBRTFPI_FIXM]	Name [DBRTFPI]	Definition	Type	Complex?	Format/Permissible Values	Example	Required?
		another flight at the downstream unit.					
flight/agreed/route/@localIntendedRoute	localIntendedRoute_10b	The Local Intended Route attribute contains the flight plan route that is coordinated to penetrated facilities. It consists of the flight plan route merged with any expected-to-be-applied-by-the-controlling-center Adapted Departure Routes (ADRs), Adapted Departure Arrival Routes (ADARs) or Adapted Arrival Routes (AARs). It is intended for the clients that wish to know the expected state of the flight plan when the current facility releases control of the flight. The attribute localIntendedRoute contains the filed route (flight/agreed/route/@nasRouteText) merged with any locally applicable adapted routes (preferential routes, transition fixes and A-line fixes). Optional localIntendedRoute is sent to ATM-IPOP, when the localIntendedRoute is not the same as filed route (flight/agreed/route/@nasRouteText).	*fb:FreeTextType*	No	**"[A-Z0-9+/*]{2,12}_?\.[A-Z0-9+\./]*\.[A-Z0-9+/*]{2,12}_?(/\d{4})?"** Minimum length = 3 Maximum length = 4096		No
flight/agreed/route/expandedRoute/routePoint/point	fix_68c1	A route may contain an optional expanded route that consists of an ordered list of expanded route points.	fb:SignificantPointType (abstract type) *fb:FixPointType/*	Yes	- *fb:FixPointType* **"[A-Z0-9]{2,5}"** - *ff:GeographicalLocationType* List of two **xs:double** (latitude followed by longitude)	**KDFW**	No

Name [DBRTFPI_FIXM]	Name [DBRTFPI]	Definition	Type	Complex?	Format/Permissible Values	Example	Required?
		The expanded route represents the expansion of the route into a list of points which describe the aircraft's expected 2D path from the departure aerodrome to the arrival aerodrome. This element specifies a single point that is part of the aircraft's expanded route of flight.	*ff:GeographicalLocationType/ fb:RelativePointType*		- *fb:RelativePointType* - fix: **"[A-Z0-9]{2,5}"** - distance: *ff:DistanceType* **xs:double** - radial: *fb:DirectionType* **xs:double** minInclusive = 0 maxInclusive =360		
flight/agreed/route/expandedRoute/routePoint/@estimatedTime	crossingTime_68c2	This element specifies the estimated time over the expanded route point.	ff:TimeType	No	xs:dateTime	**2014-06-20T20:17:52**	No
flight/agreed/route/estimatedElapsedTime/location flight/agreed/route/estimatedElapsedTime/@elapsedTime	EETIndicator_918b	This element specifies the estimated amount of time from takeoff to reach a significant point or Flight Information Region (FIR) boundary along the route of the flight.	*location*: fx:ElapsedTimeLocationType *@elapsedTime*: ff:DurationType	fx:ElapsedTimeLocationType (longitude/point/region): *Yes* ff:Duration	The *location* associated with the elapsed time can be *longitude*, *significant point* or *region* (Flight Information Region (FIR) boundary): - *longitude*: **xs:double** - *point*: - fb:FixPointType **"[A-Z0-9]{2,5}"** - ff:GeographicalLocationType List of two **xs:double** (latitude followed by longitude) - fb:RelativePointType - fix: **"[A-Z0-9]{2,5}"** - distance: ff:DistanceType **xs:double** - radial: fb:DirectionType	location: **KZNY** @elapsedTime: **PT1H46M**	No

Name [DBRTFPI_FIXM]	Name [DBRTFPI]	Definition	Type	Complex?	Format/Permissible Values	Example	Required?
				Type: *No*	**xs:double** minInclusive = 0 maxInclusive =360 - *region*: **xs:string** *@elapsedTime:* **xs:duration**		
flight/routeToRevisedDestination/route/@routeText	RIFIndicator_918c	This attribute specifies the ICAO route text of a route to a revised destination aerodrome. The route text is as depicted from the flight plan.	fb:FreeTextType	No	Free-form string of up to 4,096 characters. The destination aerodrome has to be specified using the four-letter ICAO location code.	**DTA HEC KLAX**	No
flight/aircraftDescription/@registration	REGIndicator_918d	A unique, alphanumeric string that identifies a civil aircraft and consists of the Aircraft Nationality or Common Mark and an additional alphanumeric string assigned by the state of registry or common mark registering authority.	fx:AircraftRegistrationType	No	**"[A-Z0-9]{1,7}"** Up to 4,096 characters.	**N5258E**	No
flight/aircraftDescription/capabilities/communication/@selectiveCallingCode	SELIndicator_918e	This attribute specifies the Selective Calling (SELCAL) Code that consists of two 2-letter pairs. SELCAL is a selective-calling radio system that alerts aircraft crew to incoming radio communications. It acts as a paging system for an ATS unit to establish voice communications with the pilot of an aircraft.	fx:SelectiveCodeType	No	**"[A-HJ-MP-S]{4}"**	**ACHA BRLM**	No
flight/operator/operatingOrganization/organization/@name	OPRIndicat	This attribute specifies the full official name of the State,	ff:TextNameType	No	xs:string	UAL	No

DRAFT

Name [DBRTFPI_FIXM]	Name [DBRTFPI]	Definition	Type	Complex?	Format/Permissible Values	Example	Required?
	or_918f	Organization, Authority, aircraft operating agency, handling agency engaged in or offering to engage in aircraft operation.			NOTE Always map to organization.		
flight/specialHandling	STSIndicator_918g	This element specifies the special handling reason: a property of the flight that requires ATS units to give it special consideration, such as hospital aircraft.	fx:SpecialHandlingCodeType	No	The following are the only valid special handling indicators: **"ALTRV|ATFMX|FFR|FLTCK|HAZMAT|HEAD|HOSP|HUM|MARSA|MEDEVAC|NONRVSM|SAR|STATE"** NOTE There could be multiple entries.	**ALTRV**	No
flight/aircraftDescription/aircraftType/otherModelData	TYPIndicator_918h	Other, non-ICAO, identification of the aircraft.	fb:FreeTextType	No	Free-form string of up to 4,096 characters.	**CESNA140**	No
flight/aircraftDescription/@aircraftPerformance	PERIndicator_918i	A coded category assigned to the aircraft based on a speed directly proportional to its stall speed, which functions as a standardized basis for relating aircraft maneuverability to specific instrument approach procedures.	fx:AircraftPerformanceCategoryType	No	Single valid letter specified in PAN-OPS 8168 Volume 1: **"[ABCDEH]"** where: **A** – Indicated airspeed (IAS) less than 169 km/h (91kt) **B** – IAS between 169 km/h (91kt) and 224 km/h (121 kt) **C** – IAS between 224 km/h (121 kt) and 261 km/h (141 kt) **D** – IAS between 261 km/h (141 kt) and 307 km/h (166 kt) **E** - IAS between 307 km/h (166 kt) and 391 km/h (211 kt) **H** - Helicopters	**C**	No
flight/aircraftDescription/capabilities/communication/@otherCommunicationCapabilities	COMIndicator_918j	This element contains additional Communication Equipment available on aircraft not specified in the	fb:FreeTextType	No	Free-form string of up to 4,096 characters.	**HF ONLY TCAS**	No

DRAFT

Name [DBRTFPI_FIXM]	Name [DBRTFPI]	Definition	Type	Complex?	Format/Permissible Values	Example	Required?
		route/@nasRouteText attribute.					
flight/aircraftDescription/capabilities/communication/@otherDataLinkCapabilities	DATIndicator_918k	This element specifies data link capabilities available on the aircraft.	fb:FreeTextType	No	**"[SHVM]{1,4}"** Free-form string of up to 4,096 characters. where: **S** – satellite data link **H** – HF data link **V** – VHF data link **M** – SSR Mode S data link One or more of the valid letters may be specified in this element.	**SV**	No
flight/aircraftDescription/capabilities/navigation/@otherNavigationCapabilities	NAVIndicator_918l	This element contains Navigation Equipment Data. It is used for additional Navigation Equipment available on board of aircraft not specified in the route/@nasRouteText attribute.	string	No	Free-form string of up to 4,096 characters.	**ADF ONLY**	No
flight/departure/departureAerodrome/@name flight/departure/departureAerodrome/point	DEPIndicator_918m	This element contains the name of the unlisted aerodrome from which the flight departs. If the departure aerodrome has an ICAO designator, it is stored in the attribute flight/departure/@departure Point, as suggested in 19.	Abstract type: *fb:AerodromeReferenceType* that instantiates as: *fb:UnlistedReferenceType* Type of *departureAerodromeAlternate/@name*: *fb:AerodromeNameType* Type of *departureAerodr*	Yes	The unlisted aerodrome is identified by its name (optionally) plus a significant point according to the following format: *-departureAerodrome/@name*: **xs:string** -for *departurelAerodrome/point* there are three ways to specify the significant point*:* *1)* location of fix specified by name *(* type f*b:FixPointType)*: **"[A-Z0-9]{2,5}"** *2)* geographic location specified by latitude and longitude	*@name*: **MILLSPAW FARM** *point/@fix:* **HBZ** *point/distance* (*@uom* **NAUTICAL_MILES**): **10.0** *point/radial* (*@uom* **DEGREES**)	No

Name [DBRTFPI_FIXM]	Name [DBRTFPI]	Definition	Type	Complex?	Format/Permissible Values	Example	Required?
			ome/point: *fb:SignificantPointType* (abstract type that can instantiate as: *fb:FixPointType/ ff:GeographicalLocationType/ fb:RelativePointType*)		*(ff:GeographicalLocationType):* - list of two **xs:double** (latitude followed by longitude) 3) fix-radial-distance (*fb:RelativePointType):* (a) fix: **"[A-Z0-9]{2,5}"** (b) distance (*ff:DistanceType*): **xs:double** (c) radial (*fb:DirectionType*): **xs:double** minInclusive = 0 maxInclusive =360	: **236.0**	
flight/arrival/arrivalAerodrome/@name flight/arrival/arrivalAerodrome/point	DESTIndicator_918n	This element includes the name and location of the unlisted aerodrome at which the flight is scheduled to arrive. If the arrival aerodrome has an ICAO designator, it is stored in the attribute flight/arrival/@arrivalPoint, as suggested in 19.	Abstract type: *fb:AerodromeReferenceType* that instantiates as: *fb:UnlistedReferenceType* Type of *arrivalAerodromeAlternate/@name*: *fb:AerodromeNameType* Type of *arrivalAerodrome/point:* *fb:SignificantPointType* (abstract type that can instantiate as:	Yes	The unlisted aerodrome is identified by its name (optionally) plus a significant point according to the following format: *-arrivalAerodrome/@name*: **xs:string** -for *arrivalAerodrome/point* there are three ways to specify the significant point*:* *1)* location of fix specified by name *(* type f*b:FixPointType)*: **"[A-Z0-9]{2,5}"** *2)* geographic location specified by latitude and longitude *(ff:GeographicalLocationType):* - list of two **xs:double** (latitude followed by longitude) 3) fix-radial-distance (*fb:RelativePointType):*	*@name*: **MILLSPAW FARM** *point/@fix:* **HBZ** *point/distance* (*@uom* **NAUTICAL_MILES):** **10.0** *point/radial* (*@uom* **DEGREES**): **236.0**	No

Name [DBRTFPI_FIXM]	Name [DBRTFPI]	Definition	Type	Complex?	Format/Permissible Values	Example	Required?
			fb:FixPointType/ ff:GeographicalLocationType/ fb:RelativePointType)		(a) fix: **"[A-Z0-9]{2,5}"** (b) distance (*ff:DistanceType*): **xs:double** (c) radial (*fb:DirectionType*): **xs:double** minInclusive = 0 maxInclusive =360		
flight/enRoute/alternateAerodrome	RALTIndicator_918p	This element identifies an En Route Alternate Aerodrome to which a flight could be diverted while en route, if needed. Multiple alternate aerodromes may be specified.	Abstract type: *fb:AerodromeReferenceType* that instantiates as: *ff:IcaoAerodromeReferenceType* if the aerodrome has an ICAO designator, or as: *fb:UnlistedReferenceType* otherwise. *@code: ff:IcaoAerodromeReferenceType*) *@name*: AerodromeNameType *point: fb:SignificantPointType* (abstract type that can instantiate as: *fb:FixPointType/*	Yes	The aerodrome may be identified by: - ICAO code: *alternateAerodrome/@code*: **"[A-Z]{4}"**, or: - name ("Dallas Fort Worth") or 3-character IATA Alternate Identifier (such as "DFW") plus significant point, for an unlisted aerodrome, according to the following format: -*alternateAerodrome/@name*: **xs:string** -for *alternateAerodrome/point* there are three ways to specify the significant point: *1)* location of fix specified by name *(* type f*b:FixPointType)*: **"[A-Z0-9]{2,5}"** *2)* geographic location specified by latitude and longitude *(ff:GeographicalLocationType):* - list of two **xs:double** (latitude followed by longitude)	**KDFW** or: *@name*: **MILLSPAW FARM** *point/@fix:* **HBZ** *point/distance* (*@uom* **NAUTICAL_MILES): 10.0** *point/radial* (*@uom* **DEGREES**) : **236.0**	No

Name [DBRTFPI_FIXM]	Name [DBRTFPI]	Definition	Type	Complex?	Format/Permissible Values	Example	Required?
			ff:GeographicalLocationType/ fb:RelativePointType)		3) fix-radial-distance (*fb:RelativePointType):* (a) *point/@fix*: **"[A-Z0-9]{2,5}"** (b) *point/distance* (*ff:DistanceType*): **xs:double** (c) *point/radial* (*fb:DirectionType*): **xs:double** minInclusive = 0 maxInclusive =360		
flight/aircraftDescription/@aircraftAddress	CODEIndicator_918q	A code that enables the exchange of text-based messages between suitably equipped Air Traffic Service (ATS) ground systems and aircraft cockpit displays (the aircraft Controller-Pilot Data Link Communications (CPDLC) address).	fx:AircraftAddressType	No	**"[0-9A-F]{6}"**	**45FA16**	No
flight/aircraftDescription/capabilities/surveillance/@otherSurveillanceCapabilities SURIndicator_918s	SURIndicator_918s	This element specifies the surveillance applications or capabilities not specified in the attribute *flight/agreed/route/@localIntendedRoute*.	fb:FreeTextType	No	Free-form string of up to 4096 characters.	**282B**	No
flight/agreed/route/segment/routePoint/point flight/agreed/route/segment/@delayAtPoint	DLEIndicator_918t	The element *routePoint/point* specifies a single point along the flight route. The attribute routePoint/*@delayAtPoint* specifies the length of time the flight is expected to be delayed at this specific point en route.	*point* Type: fb:SignificantPointType (abstract type) *fb:FixPointType/ ff:GeographicalLocationType/ fb:RelativePointType*	SignificantPointType:Yes Dur	*point:* - *fb:FixPointType* **"[A-Z0-9]{2,5}"** - *ff:GeographicalLocationType* List of two **xs:double** (latitude followed by longitude) - *fb:RelativePointType* - fix: **"[A-Z0-9]{2,5}"**	Example for *point:* **MDG** Example for *delayAtPoint:*	No

Name [DBRTFPI_FIXM]	Name [DBRTFPI]	Definition	Type	Complex?	Format/Permissible Values	Example	Required?
			@delayAtPoint Type: ff:DurationType	ationType: No	- distance: *ff:DistanceType* **xs:double** - radial: *fb:DirectionType* **xs:double** minInclusive = 0 maxInclusive =360 *@delayAtPoint*: xs:duration	**PT46M**	
flight/departure/takeoffAlternateAerodrome	TALTIndicator_918u	This element specifies an alternate aerodrome at which an aircraft can land, should it become necessary shortly after takeoff, and it is not possible to land at the departure aerodrome. Multiple alternate takeoff aerodromes may be specified.	fb:AerodromeReferenceType ff:IcaoAerodromeReferenceType or fb:UnlistedReferenceType	Yes	The aerodrome may be identified by: - its ICAO code ("KDFW") (*ff:IcaoAerodromeReferenceType*) in the attribute *takeoffAlternateAerodrome/@code,* where the format is: **"[A-Z]{4}"** - its name ("Dallas Fort Worth") or 3-character IATA Alternate Identifier (such as "DFW") *takeoffAlternateAerodrome/@name* (optional) and a significant point *takeoffAlternateAerodrome/point,* for an unlisted aerodrome (*fb:UnlistedReferenceType*). Format for *takeoffAlternateAerodrome/@name:* **xs:string** Format for *takeoffAlternateAerodrome/point*: - *fb:FixPointType* **"[A-Z0-9]{2,5}"**	**KDFW**	No

DRAFT

Name [DBRTFPI_FIXM]	Name [DBRTFPI]	Definition	Type	Complex?	Format/Permissible Values	Example	Required?
					- *ff:GeographicalLocationType* List of two **xs:double** (latitude followed by longitude) - *fb:RelativePointType* - fix: **"[A-Z0-9]{2,5}"** - distance: *ff:DistanceType* **xs:double** - radial: *fb:DirectionType* **xs:double** minInclusive = 0 maxInclusive =360		
flight/originator/aftnAddress flight/originator/flightOriginator	ORGNIndicator_918w	This element contains information about the flight originator that initiated the flight. It specifies the originator's eight-letter Aeronautical Fixed Telecommunication Network (AFTN) station address or other appropriate contact details, in cases where the originator of the flight plan may not be readily identified, as required by the appropriate ATS authority.	Type of *originator/aftnAddress*: fb:AftnAddressType Type of *originator/flightOriginator*: fb:FreeTextType	No	For *aftnAddress:* **"[A-Z]{8}"** For *flightOriginator:* Free-form string of up to 4096 characters.	**LEBBYNYX**	No
flight/aircraftDescription/capabilities/navigation/performanceBasedCode	PBNIndicator_918x	This element specifies a coded category denoting which Required Navigation Performance (RNP) and Area Navigation (RNAV) requirements can be met by the aircraft while operating in the context of a particular airspace when supported by	fx:PerformanceBasedCodeType	No	**"A1|B[1-6]|C[1-4]|D[1-4]|L1|O[1-4]|S[1-2]|T[1-2]"** *RNAV* and *RNP* capabilities are two-characters each, as follows: *RNAV* specifications: **A1** RNAV10 (RNP 10) **B1** RNAV 5 all permitted sensors **B2** RNAV 5 GNSS	**B1O1**	No

DRAFT

Name [DBRTFPI_FIXM]	Name [DBRTFPI]	Definition	Type	Complex?	Format/Permissible Values	Example	Required?
		the appropriate navigation infrastructure.			**B3** RNAV 5 DME/DME **B4** RNAV 5 VOR/DME **B5** RNAV 5 INS or IRS **B6** RNAV 5 LORANC **C1** RNAV 2 all permitted sensors **C2** RNAV 2 GNSS **C3** RNAV 2 DME/DME **C4** RNAV 2 DME/DME/IRU **D1** RNAV 1 all permitted sensors **D2** RNAV 1 GNSS **D3** RNAV 1 DME/DME **D4** RNAV 1 DME/DME/IRU *RNP* specifications: **L1** RNP 4 **O1** Basic RNP 1 all permitted sensors **O2** Basic RNP 1 GNSS **O3** Basic RNP 1 DME/DME **O4** Basic RNP 1 DME/DME/IRU **S1** RNP APCH **S2** RNP APCH with BAR-VNAV **T1** RNP AR APCH with RF (special authorization required) **T2** RNP AR APCH without RF (special authorization required)		
flight/supplementalData/additionalFlightInformation/nameValue/@name flight/supplementalData/additionalFlightInformation/nameValue/@value	ICAO1stAdaptedField18_999a ICAO1stAdaptedField18_999b ICAO1stAdaptedField18_999c	Additional information about a flight that does not fall into other predefined category. The information is expressed in key-value pairs. The element consists of an identification tag/indicator and the relevant value.	Type of *additionalFlightInformation* is a list of up to 10 name-value pairs: *fb:NameValueListType* Type of	No	Format for *@name:* **"[A-Z0-9_]{1,20}"** Format for *@value:* **xs:string** **minLength=1, maxLength=100**		No

Name [DBRTFPI_FIXM]	Name [DBRTFPI]	Definition	Type	Complex?	Format/Permissible Values	Example	Required?
	ICAO1stAdaptedField18_999d ICAO1stAdaptedField18_999e ICAO1stAdaptedField18_999f ICAO1stAdaptedField18_999g ICAO1stAdaptedField18_999h ICAO1stAdaptedField18_999i ICAO1stAdaptedField18_999j ICAO1stAdaptedField18_999k ICAO1stAdaptedField18_999l ICAO1stAdaptedField18_999m ICAO1stAdaptedField18_999n ICAO1stAdaptedField18_999o	**NOTE** There are 25 fields that could be stored under the element *additionalFlightInformation* but only 10 slots allowed in FIXM. Additionally, SFDPS is planning on using some of these slots for storing a number SFDPS specific items that did not seem to be a good choice for addition in the FIXM U.S. Extension. Data analysis has shown no more than five of these adapted field 18 entries tend to appear in the actual data feed but this is a definite risk if more begin to show up.	*nameValue*: *fb:NameValuePairType* Type for attribute *name*: *fb:FreeTextType* Type for attribute *value*: *fb:FreeTextType*				

DRAFT

Name [DBRTFPI_FIXM]	Name [DBRTFPI]	Definition	Type	Complex?	Format/Permissible Values	Example	Required?
	ICAO1stAdaptedField18_999p ICAO1stAdaptedField18_999q ICAO1stAdaptedField18_999r ICAO1stAdaptedField18_999s ICAO1stAdaptedField18_999t ICAO1stAdaptedField18_999u ICAO1stAdaptedField18_999v ICAO1stAdaptedField18_999w ICAO1stAdaptedField18_999x ICAO1stAdaptedField18_999y						
flight/aircraftDescription/accuracy/cmsFieldType	RNVArrival_925a … → _925f RNPArrival_925g … → RNP…_925	This element specifies the flight's navigation accuracy value for the phase of flight, specified in the Performance-Based Navigation Phase, included in the attribute *@phase*, and for the	nas:CmsAccuracyType	No	**xs:double**	Accuracy of 0.3 nm: 0.3 cmsFieldType/@uom =	No

DRAFT

Name [DBRTFPI_FIXM]	Name [DBRTFPI]	Definition	Type	Complex?	Format/Permissible Values	Example	Required?
	l	Performance-Based Navigation Category specified in the attribute *@type*.				"NAUTICAL_MILES"	
flight/aircraftDescription/accuracy/cmsFieldType/@type	RNVArrival_925a … → _925f RNPArrival_925g … → RNP…_925l	This element specifies the Performance-Based Navigation Category that indicates whether the accuracy measure in Performance-Based Navigation Accuracy is measuring Area Navigation (RNAV) or Required Navigation Performance (RNP).	nas:CmsAccuracyTypeType	No	**"RNV|RNP"**	**RNV**	No
flight/aircraftDescription/accuracy/cmsFieldType/@phaseflight/aircraftDescription/accuracy/cmsFieldType/@uom	RNVArrival_925a … → _925f RNPArrival_925g … → RNP…_925l	This element specifies the Performance-Based Navigation Phase that indicates the phase of flight for which navigation performance is being recorded.	nas:NasPerformanceBasedNavigationPhaseType		"**DEPARTURE|ARRIVAL|ENROUTE|OCEANIC|SPARE_1|SPARE_2**"	**DEPARTURE**	No
flight/aircraftDescription/accuracy/cmsFieldType/@uom	RNVArrival_925a … → _925f RNPArrival_925g … → RNP…_925l	This element specifies the units of measure for distance.	ff:DistanceMeasureType	No	**"KILOMETERS|NAUTICAL_MILES|MILES"**	**NAUTICAL_MILES**	Yes
flight/enRoute/position/altitude	reconReportedAlt_2460	This element specifies the reported altitude that is the latest valid Mode C altitude received from an aircraft or the latest reported altitude received from a pilot.	ff:AltitudeType	Yes	xs:double	24000 @uom=FEET	No
flight/enRoute/position/altitude/@uom	reconReportedAlt_2460	This element specifies the unit of measure for altitude.	ff:AltitudeMeasureType	No	**"FEET|METRES"**	FEET	Yes

DRAFT

Name [DBRTFPI_FIXM]	Name [DBRTFPI]	Definition	Type	Complex?	Format/Permissible Values	Example	Required?
flight/departure/runwayPositionAndTime/runwayTime/controlled	cancellationIndicator_92b	This optional element is included to indicate a cancellation.	Element value set to NULL: xsi:nill="true"	No	**NULL**		No
flight/agreed/route/@atcIntendedRoute	ATCIntendedRoute_10c	The current cleared flight plan route with any unacknowledged auto routes (preferential routes, transition fixes and A-line fixes) already applied.	fb:FreeTextType	No	**"[A-Z0-9+/*]{2,12}_?\.[A-Z0-9+\./]*\.[A-Z0-9+/*]{2,12}_?(/\d{4})?"** Minimum length = 3 Maximum length = 1000	**JFK.J42.TXK.STAR1.DFW**	No
flight/aircraftDescription/capabilities/@standardCapabilities	comNavApproachEquipICAO2012_910c	If present, this element indicates that aircraft has the "standard" capabilities for the flight.	fx:StandardCapabilitiesIndicatorType	No	**restriction of xs:string "STANDARD"**	**STANDARD**	No
flight/aircraftDescription/capabilities/communication/communicationCode	comNavApproachEquipICAO2012_910c	This element describes the aircraft communication code.	fx:CommunicationCodeType	No	**"E[1-3]|H|M[1-3]|P[1-9]|[UVY]"** Where: E1 – FMC WPR ACARS E2 – D-FIS ACARS E3 – PDC ACARS H – HF RTF M1 – ATC RTF SATCOM (INMARSAT) M2 - ATC RTF SATCOM (MTSAT) M3 – ATC RTF (Iridium) P1-P9 – Reserved for RCP U – UHF RTF V – VHF RTF Y – VHF with 8.33 kHz spacing capacity	E1	No
flight/aircraftDescription/capabilities/communication/dataLinkCod	comNavApproachEquipICAO2012_910c	This element specifies Data Link Communication Capabilities that consist in serviceable equipment and capabilities available on the aircraft at the time of flight that may be used to	fx:DataLinkCodeType	No	**"J[1-7]"** Where: J1 – CPDLC ATN VDL Mode 2 J2 – CPDLC FANS 1/A HDFL J3 - CPDLC FANS 1/A VDL Mode A J4 - CPDLC FANS 1/A VDL Mode 2	J2	No

DRAFT

Name [DBRTFPI_FIXM]	Name [DBRTFPI]	Definition	Type	Complex?	Format/Permissible Values	Example	Required?
		communicate data to and from the aircraft.			J5 - CPDLC FANS 1/A SATCOM (INMARSAT) J6 - CPDLC FANS 1/A SATCOM (MTSAT) J7 - CPDLC FANS 1/A SATCOM (Iridium)		
flight/aircraftDescription/capabilities/navigation/navigationCode	comNavApproachEquipICAO2012_910c	This element describes the aircraft navigation code.	fx:NavigationCodeType	No	**"[ABCDFGIKLOTWX]"** Where: **A** – GBAS landing system **B** – LPV (APV with SBAS) **C** – LORAN C **D** – DME **F** – ADF **G** – GNSS **I** – Inertial Navigation **K** – MLS **O** – VOR **T** – TACAN **W** – RVSM approved **X** – MNPS approved	A	No
flight/aircraftDescription/capabilities/surveillance/surveillanceCode	survEquipICAO2012_910d	This element describes the aircraft surveillance code.	fx:SurveillanceCodeType	No	**"[ACEHILPSX]|[BUV][12]|D1|G1"** where: **A** – Transponder Mode A **C** – Transponder Mode A and C **E** – Transponder – Mode S, including aircraft identification, pressure-altitude and extended squitter (ADS-B) capability **H** – Transponder – Mode S, including aircraft identification, pressure-altitude and enhanced surveillance capability **I** - Transponder – Mode S,	HB2U2V2G	No

DRAFT

Name [DBRTFPI_FIXM]	Name [DBRTFPI]	Definition	Type	Complex?	Format/Permissible Values	Example	Required?
					including aircraft identification, but no pressure-altitude capability **L** – Transponder – Mode S, including aircraft identification, pressure-altitude, extended squitter (ADS-B) and enhanced surveillance capability **P** – Transponder – Mode S, including pressure-altitude, but no aircraft identification **S** – Transponder – Mode S, including both pressure-altitude and aircraft identification capability **X** – Transponder - Mode S with neither aircraft identification nor pressure-altitude capability **B1** – ADS-B with dedicated 1090 mHz ADS-B "out" capability **B2** – ADS-B with dedicated 1090 mHz ADS-B "out" and "in" capability **U1** - ADS-B "out" capability using UAT **U2** - ADS-B "out" AND "IN" capability using UAT **V1** - ADS-B "out" capability using VDL Mode 4 **V2** - ADS-B "out" and "in" capability using VDL Mode 4 **D1** – ADS-C with FANS 1/A capabilities **G1** - ADS-C with ATN capabilities		

DRAFT

5.5.2 Airspace Data Publication Service Data Elements and Diagrams

5.5.2.1 ERADP Service: targetNamespace

The targetNamespace that applies to all messages in the Airspace Data Publication Service is:
us:gov:dot:faa:atm:enroute:entities:flightdata

5.5.2.2 Sector Assignment Status [SH] – Data Elements

Element Name [SH]	Element Definition	Type	Complex?	Format/Permissible Values	Example	Required?
sourceId_00e	This element specifies the source identification that includes a UTC time followed by a four-digit sequence number.	string	No	**"\d{10}"** Ten digits, of which the first 6 digits represent the UTC time (*hhmmss*) and the last four digits, represent the message sequence number in the range [0000-9999].	**2359359001**, where the first 6 digits are the UTC time (23:59:35 UTC) and the last 4 digits are sequence number of the message (9001).	Yes
sourceTime_00e1	This element specifies the time component of the previous element, sourceId_00e.	string	No	**"[0-2]\d_[0-5]\d_[0-5]\d"** Time in the format *hh_mm_ss,* where: *hh* stands for the 2-digit-hour in the range 00-23, *mm* stands for the 2-digit minutes in the range 00-59, and *ss* stands for the 2-digit seconds in the range 00-59.	**23_59_35** that represents 23:59:35 UTC	Yes
sourceSeqNo_00e2	This element specifies the message sequence number component of the sourceId_00e element.	string	No	**"\d{4}"** Four-digit number in the range [0000-9999].	**9001**	Yes
sector	This element is used to group the following elements: sector_29a, **n**oFAV_29c, and FAVAssignments, The element FAVAssignments is	T_airspaceAssignment	Yes	This element can appear from one to one hundred times.		Yes

Element Name [SH]	Element Definition	Type	Complex?	Format/Permissible Values	Example	Required?
	used to group, between one and 437 FAV_29d elements. Each sector element can include one sector_29a element, followed by either a noFAV_29c element or a FAVAssignments element.					
tracon	This element is used to group the following elements: tracon_29g, traconNoFAV_29h, traconFAVAssignments, Each tracon element can include one tracon_29g element, followed by either a traconNoFAV_29h element or a traconFAVAssignments element.	T_traconAssignment	Yes	The tracon element can appear from zero to one hundred times.		No
sector_29a	This element provides the sector number, for which the following FAV data applies.	string	No	**"\d{2}"** The format consists of two digits, with leading zeroes as needed.	53 **09**	Yes
noFAV_29c	When this element is present in the message, it indicates that there is no FAV assignment for this sector. Either this element or the element FAVAssignments must be present in a message.	string	No	**"-"** Only one valid value, "-"(a dash).	**-**	No
FAVAssignments	This element groups the following *FAV_29d* elements. There can be from one to 437 FAV_29d elements in each FAVAssignments element. Either this element or noFAV_29c must be present in the element *tracon*.		Yes			No

DRAFT

Element Name [SH]	Element Definition	Type	Complex?	Format/Permissible Values	Example	Required?
FAV_29d	This element provides the FAV Airspace Assignment number	string	No	**"\d{4}"** The format consists of four digits, with leading zeroes as needed.	0053 2509	No
tracon_29g	This element provides the tracon identifier, for which the following FAV data applies.	string	No	**"[A-Z0-9]{3}"**	PIP	No
traconNoFAV_29h	When this element is included in the message, it indicates that there is no FAV assignment for this sector. If this field appears, *FAVAssignments* element is not be included in the message.	string	No	**"-"** It has only one allowed value, - (a dash).	**-**	No
traconFAVAssignments	This element groups the following *traconFAV_29i* elements. There can be from one to 437 *traconFAV_29i* elements in each *traconFAVAssignments* element. If this element appears in the message, element *traconNoFAV_29h* is not included in the message.		Yes			No
traconFAV_29i	This element provides the FAV Airspace Assignment number.	string	No	**"\d{4}"** The format consists of four digits. Leading zeroes are included when necessary.	0053 2509	No

DRAFT

5.5.2.3 Sector Assignment Status [SH] - Diagram

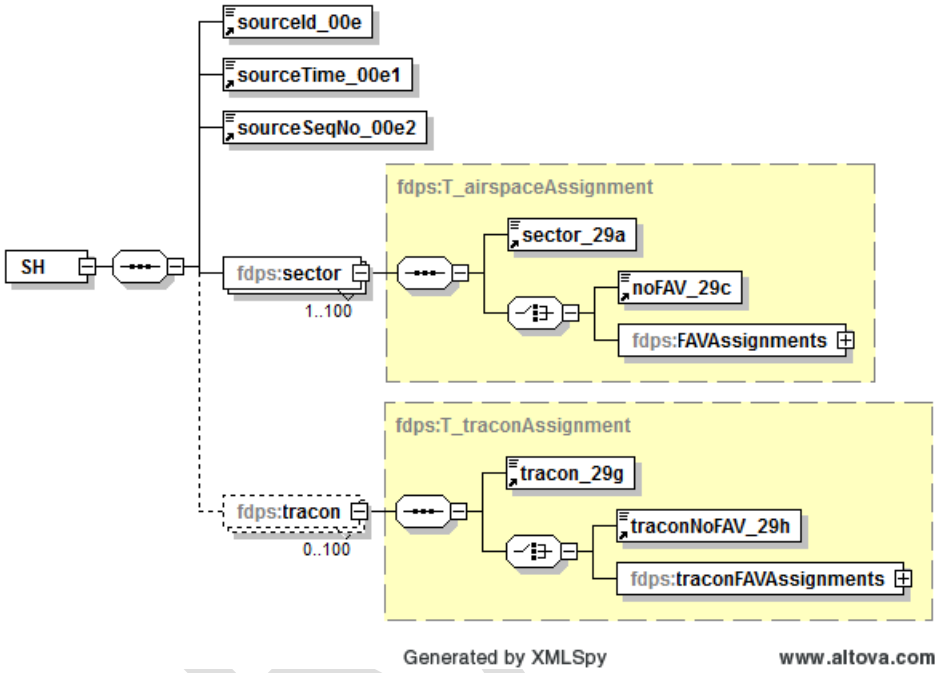

5.5.2.4 Sector Assignment Status Message in AIXM Format [SH_AIXM] – Data Elements

The following elements of the SH message in Simple XML format are not used in the AIXM format of the message:

- sourceId_00e
- sourceTime_00e1
- sourceSeqNo_00e2
- sector
- tracon
- noFAV_29c
- FAVAssignments

- tracon_29g
- traconNoFAV_29h
- traconFAVAssignments
- traconFAV_29i

Element Name [SH_AIXM]	Element Name [SH]	Element Definition	Type	Complex?	Format/Permissible Values	Example	Required?
AIXMBasicMessage/hasMember/Airspace/timeSlice/AirspaceTimeSlice/aixm:interpretation		Property indicating how the time slice is to be interpreted.	string	No	"SNAPSHOT"	"SNAPSHOT"	Yes
AIXMBasicMessage/hasMember/Airspace/timeSlice/AirspaceTimeSlice/type		A coded list of values that indicates a type of airspace.	aixm:CodeAirspaceType	Yes	"SECTOR"	"SECTOR"	Yes
AIXMBasicMessage/hasMember/Airspace/timeSlice/AirspaceTimeSlice/designator	sector_29a	This element provides the sector number, for which the FAV data applies.	aixm:CodeAirspaceDesignatorType	Yes	**"\d{2}"**	53 09	Yes
AIXMBasicMessage/hasMember/extension/SectorAssignmentStatusExtension/FAVNumber	FAV_29d	This element provides the FAV Airspace Assignment number, or a code (a dash character) that indicates that there is no FAV assignment for this sector.	aixm:TextNameType	No	**"\d{4}|\-"** There may be up to 437 FAV numbers for each sector defined.	**7801** **"-"**	Yes

5.5.2.5 Route Status [HR] – Data Elements

Element Name [HR]	Element Definition	Type	Complex?	Format/Permissible Values	Example	Required?
sourceId_00e	This element specifies the source identification that includes a UTC time followed by a four-digit sequence	string	No	**"\d{10}"** Ten digits, of which the first 6 digits represent the UTC time (*hhmmss*) and the last four digits, represent	**2359359001**, where the first 6 digits are the UTC time (23:59:35 UTC) and	Yes

Element Name [HR]	Element Definition	Type	Complex?	Format/Permissible Values	Example	Required?
	number.			the message sequence number in the range [0000-9999].	the last 4 digits are sequence number of the message (9001).	
sourceTime_00e1	This element specifies the time component of the previous element, sourceId_00e.	string	No	**"[0-2]\d_[0-5]\d_[0-5]\d"** Time in the format *hh_mm_ss,* where: *hh* stands for the 2-digit-hour in the range 00-23, *mm* stands for the 2-digit minutes in the range 00-59, and *ss* stands for the 2-digit seconds in the range 00-59.	**23_59_35** that represents 23:59:35 UTC	Yes
sourceSeqNo_00e2	This element specifies the message sequence number component of the sourceId_00e element.	string	No	**"\d{4}"** Four-digit number in the range [0000-9999].	**9001**	Yes
routeStatus	This element groups the following two elements, routeStatusElements_135a and actionIndicator_36a.	T_routeStatus	Yes	This element can be repeated from one to 281 times.		Yes
routeStatusElements_135a	This element contains the adapted route status elements. The adapted names are Standard Instrument Departures (SID), Standard Terminal Arrival Routes (STAR), Adapted Arrival Routes (AAR), Adapted Departure Routes (ADR) and Adapted Departure and Arrival Routes (ADAR) that are active when initialization begins.	string	No	**"[A-Z0-9]{2,6}"** The format is two to six alphanumeric characters.	SD001	Yes
actionIndicator_36a	This element shows the status of the route elements in element *actionIndicator_36a*.	string	No	**"(ON)|(OFF)"** It can have one of two possible values: ON or OFF.	**ON** **OFF**	Yes

DRAFT

5.5.2.6 Route Status [HR] - Diagram

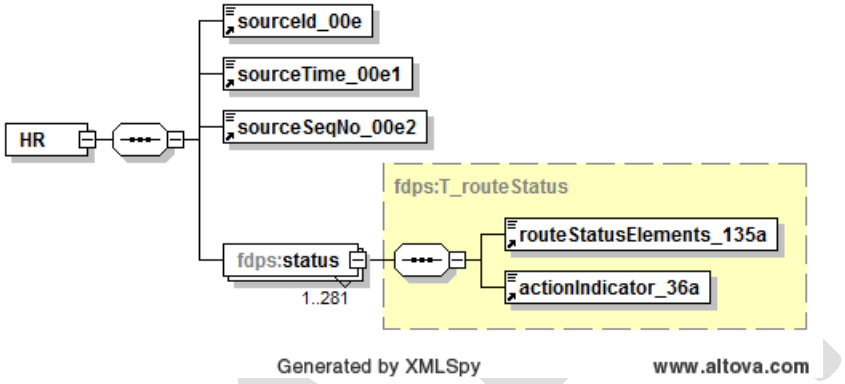

5.5.2.7 Route Status Message in AIXM Format [HR_AIXM] – Data Elements

The following elements of the HV message in Simple XML format are not used in the AIXM format of the message:

- sourceId_00e
- sourceTime_00e1
- sourceSeqNo_00e2

Element Name [HR_AIXM]	Element Name [HR]	Element Definition	Type	Complex?	Format/Permissible Values	Example	Required?
AIXMBasicMessage/hasMember	routeStatus	This element contains the RouteSegment with the route name and the route status specified.	message:BasicMessageMemberAIXMPropertyType	Yes	maxOccurs="unbounded"		Yes
AIXMBasicMessage/hasMember/RouteSegment/gml:name	routeStatusElements_135a	This element contains the adapted route names. The adapted names are Standard Instrument Departures (SID), Standard Terminal Arrival Routes (STAR), Adapted Arrival Routes (AAR), Adapted Departure Routes (ADR) and Adapted Departure	gml:CodeType	Yes	**"[A-Z0-9]{2,6}"** The format is two to six alphanumeric characters.	SD001	Yes

Element Name [HR_AIXM]	Element Name [HR]	Element Definition	Type	Complex?	Format/Permissible Values	Example	Required?
		and Arrival Routes (ADAR) that are active when initialization begins.					
AIXMBasicMessage/hasMember/RouteSegment/timeSlice/RouteSegmentTimeSlice[interpretation="SNAPSHOT"]/availability/RouteAvailability/status	actionIndicator_36a	This element shows the availability status of the route segment element.	aixm:CodeRouteAvailabilityType	Yes	**"(OPEN)|(CLSD)"**	**OPEN**	Yes

5.5.2.8 Route Status Message in FIXM Format [HR_AIXM] – Diagram

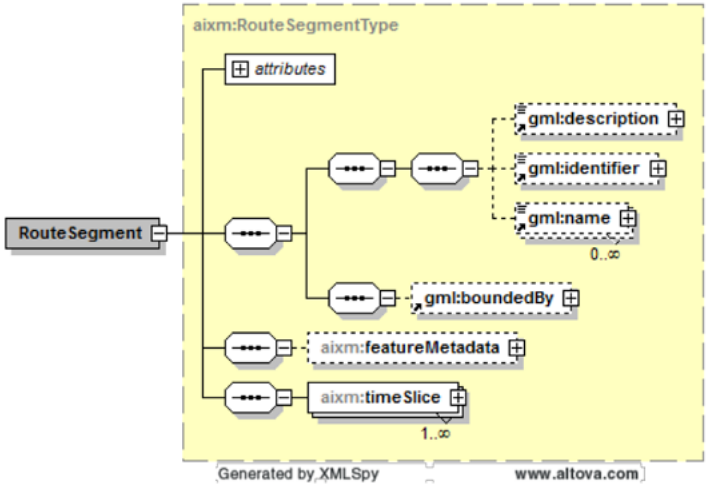

DRAFT

5.5.2.9 Special Activities Airspace (SAA) [SU] – Data Elements

Element Name [SU]	Element Definition	Type	Complex?	Format/Permissible Values	Example	Required?
sourceId_00e	This element specifies the source identification that includes a UTC time followed by a four-digit sequence number.	string	No	**"\d{10}"** Ten digits, of which the first 6 digits represent the UTC time (*hhmmss*) and the last four digits, represent the message sequence number in the range [0000-9999].	**2359359001**, where the first 6 digits are the UTC time (23:59:35 UTC) and the last 4 digits are sequence number of the message (9001).	Yes
sourceTime_00e1	This element specifies the time component of the previous element, sourceId_00e.	string	No	**"[0-2]\d_[0-5]\d_[0-5]\d"** Time in the format *hh_mm_ss,* where: *hh* stands for the 2-digit-hour in the range 00-23, *mm* stands for the 2-digit minutes in the range 00-59, and *ss* stands for the 2-digit seconds in the range 00-59.	**23_59_35** that represents 23:59:35 UTC	Yes
sourceSeqNo_00e2	This element specifies the message sequence number component of the sourceId_00e element.	string	No	**"\d{4}"** Four-digit number in the range [0000-9999].	**9001**	Yes
saaId_161a	This element specifies the ID for the special activities airspace	string	No	**"[A-Z0-9]{1,10}"** It consists of one to ten alphanumeric characters.	SHPT38ALPHA Specifies: SHP Air Force BASE training area "Alpha" for T38s.	Yes
saaActivationType_162a	This element provides the status of the SAA area.	string	No	**"(ON)|(OFF)|(SCHED)"** There are three possible values: ON (area is active), OFF (area is not active), SCHED (area activation is controlled by schedule).	**ON** **OFF** **SCHED**	Yes
saaAltRange	This element groups together the following two elements: saaLowAlt_165a and saaHighAlt_165b.	group	Yes	Either this element or *saaSchedule* may appear in a message.		No
saaLowAlt_165a	This element contains the	integer	No	Integer in the range -2000 – 100000.	**5000**	No

Element Name [SU]	Element Definition	Type	Complex?	Format/Permissible Values	Example	Required?
	lower limit of the altitude range for the SAA, expressed in feet.					
saaHighAlt_165b	This element contains the higher limit of the altitude range for the SAA, expressed in feet.	integer	No	Integer in the range -2000 – 100000.	**30000**	No
saaSchedule	This element groups together the following elements: *saaScheduleId_166a, saaScheduleType_163a, saaSchedActivationTime_164a, saaSchedDeactivationTime_164b,* and *saaAltRange.*	group	Yes	Either this element or *saaAltRange* may appear in a message. This element may appear between zero and 14 times in the SU message.		No
saaScheduleId_166a	This element contains the SAA schedule ID followed by a sequence number.	string	No	**"[A-Z]{3}\d{10}"** The format is three letters followed by ten digits.	SHP0000000016	Yes
saaScheduleType_163a	This element contains the SAA schedule type. The Schedule Type describes whether the activity is for the SAA is Scheduled or Deleted.	string	No	**"S|D"** The following formats are valid: • "S" = scheduled • "D" = deleted	**S** **D**	Yes
saaSchedActivationTime_164a	This element contains the dates and UTC times of an activation period.	string	No	**"\d{6}"** Date/time format *ddhhmm*, where: *dd*: day of month, *hh*: UTC hour, *mm*: UTC minute.	**302030**	No
saaSchedDeactivationTime_164b	This element contains the dates and UTC times of a deactivation period.	string	No	**"\d{6}"** Date/time format *ddhhmm*, where: *dd*: day of month, *hh*: UTC hour, *mm*: UTC minute.	**302330**	No

DRAFT

5.5.2.10 Special Activities Airspace (SAA) [SU] – Diagram

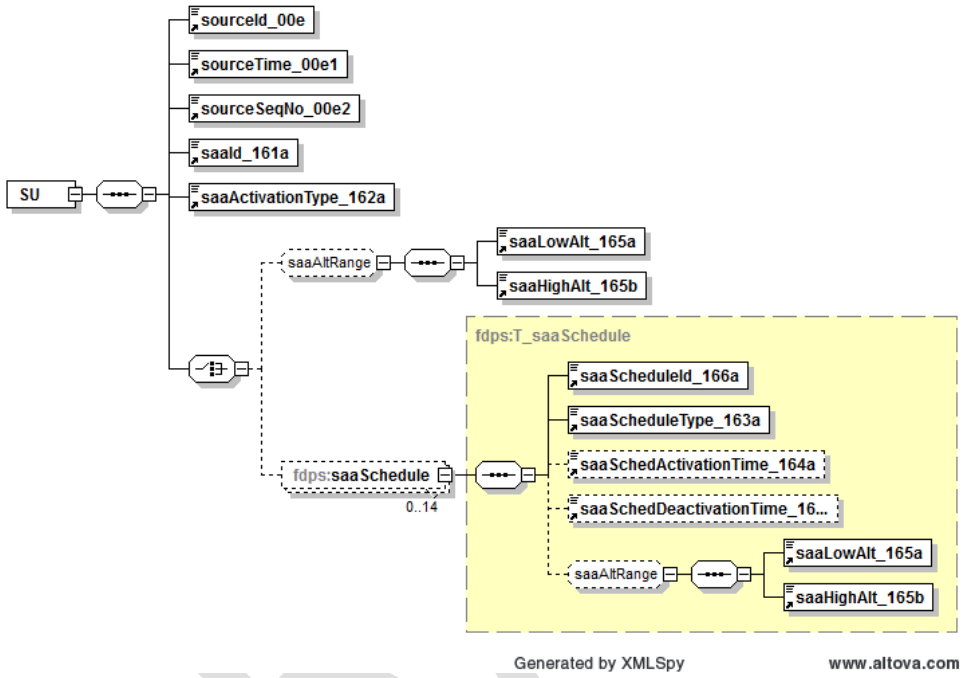

5.5.2.11 Special Activities Airspace (SAA) in AIXM Format [SU_AIXM] – Data Elements

The following elements of the HV message in Simple XML format are not used in the AIXM format of the message:

- sourceId_00e
- sourceTime_00e1
- sourceSeqNo_00e2

Name [SU_AIXM]	Name [SU]	Definition	Type	Complex?	Format/Permissible Values	Example	Required?
AIXMBasicMessage/hasMember/Airspace/timeSlice/AirspaceTimeSlice/aixm:interpretation		Property indicating how the time slice is to be interpreted.	string	No	**"SNAPSHOT"**	**"SNAPSHOT"**	Yes
AIXMBasicMessage/hasMember/Airspace/timeSlice/AirspaceTimeSlice/type		This element contains a code indicating the general structure or characteristics of a particular airspace. It contains the code "R" that indicates restricted area. Restricted area is defined as airspace of defined dimensions, above the land areas or territorial waters of a state, within which the flight of aircraft is restricted in accordance with certain specified conditions.	aixm:CodeAirspaceType	Yes	**"R"**	**"R"**	Yes
AIXMBasicMessage/hasMember/Airspace/timeSlice/AirspaceTimeSlice/designator	saaId_161a	This element specifies the ID for the special activities airspace. It consists in a published sequence of characters allowing the identification of the airspace.	aixm:CodeAirspaceDesignatorType	Yes	**"[A-Z0-9]{1,10}"** It consists of one to ten alphanumeric characters.	**SHPT38ALPHA** Specifies: SHP Air Force BASE training area "Alpha" for T38s.	Yes
AIXMBasicMessage/hasMember/Airspace/timeSlice/AirspaceTimeSlice/activation/AirspaceActivation/status	saaActivationType_162a	This element provides the status of the SAA area.	aixm:CodeStatusAirspaceType	Yes	**"(ACTIVE)|(ACTIVE)|(AVBL_FOR_ACTIVATION)"** There are three possible values: **ACTIVE** (area is active), **ACTIVE** (area is not active), **AVBL_FOR_ACTIVATION** (area activation is controlled by schedule).	**AVBL_FOR_ACTIVATION**	Yes
AIXMBasicMessage/hasMember/Airspace/timeSlice/AirspaceTimeSlice/geometryComponent/AirspaceGeometryComponent/the AirspaceVolume/AirspaceVolume	saaAltRange	A defined volume in the air, described as horizontal projection with vertical limits. The element *AirspaceVolume* has sub elements *AirspaceVolume/lowerLimit* and *AirspaceVolume/upperLimit*.	aixm: AirspaceVolumeType	Yes			No

DRAFT

Name [SU_AIXM]	Name [SU]	Definition	Type	Complex?	Format/Permissible Values	Example	Required?
AIXMBasicMessage/hasMember/Airspace/timeSlice/AirspaceTimeSlice/geometryComponent/AirspaceGeometryComponent/the AirspaceVolume /AirspaceVolume/lowerLimit	saaLowAlt_165a	This element contains the lower limit of the altitude range for the SAA. The attribute *uom* contains the unit of measurement for this element.	aixm:ValDistanceVerticalType	Yes	Integer	**5000** uom=**FT**	No
AIXMBasicMessage/hasMember/Airspace/timeSlice/AirspaceTimeSlice/geometryComponent/AirspaceGeometryComponent/the AirspaceVolume /AirspaceVolume/lowerLimit/@uom		This attribute contains the unit of measurement for vertical distance.	aixm:UomDistanceVerticalType	No	"FT|M|FL|SM|OTHER" where: FT=feet M=meters FL=flight level in hundreds of feet SM=standard meters (tens of meters)	**FT**	Yes
AIXMBasicMessage/hasMember/Airspace/timeSlice/AirspaceTimeSlice/geometryComponent/AirspaceGeometryComponent/the AirspaceVolume /AirspaceVolume/upperLimit	saaHighAlt_165b	This element contains the higher limit of the altitude range for the SAA. The attribute *uom* contains the unit of measurement for this element.	aixm:ValDistanceVerticalType	Yes	Integer	**30000** uom=**FT**	No
AIXMBasicMessage/hasMember/Airspace/timeSlice/AirspaceTimeSlice/geometryComponent/AirspaceGeometryComponent/the AirspaceVolume /AirspaceVolume/upperLimit/@uom		This attribute contains the unit of measurement for vertical distance.	aixm:UomDistanceVerticalType	No	"FT|M|FL|SM|OTHER" Where: FT=feet M=meters FL=flight level in hundreds of feet SM=standard meters (tens of meters)	**FT**	Yes
AIXMBasicMessage/hasMember/Airspace/timeSlice/AirspaceTimeSlice/extension/SAAScheduleExtension	saaSchedule	This element has the following sub elements: ID, type, activationDateTime, and deactivationDateTime.	SAAScheduleExtensionType	Yes			No
AIXMBasicMessage/hasMember/Airspace/timeSlice/AirspaceTimeSlice/extension/ SAAScheduleExtension/ID	saaScheduleId_166a	This element contains the SAA schedule ID followed by a sequence number.	aixm:TextNameType	No	**"[A-Z]{3}\d{10}"**	ZAB0000000016	No

DRAFT

Name [SU_AIXM]	Name [SU]	Definition	Type	Complex?	Format/Permissible Values	Example	Required?
AIXMBasicMessage/hasMember/Airspace/timeSlice/AirspaceTimeSlice/extension/AbstractAirspaceExtension/SAAScheduleExtension/type	saaScheduleType_163a	This element contains the SAA schedule type. The Schedule Type describes whether the activity is for the SAA is Scheduled or Deleted.	aixm:TextNameType	No	**"S|D"** where: • "S" = scheduled • "D" = deleted	**S**	No
AIXMBasicMessage/hasMember/Airspace/timeSlice/AirspaceTimeSlice/extension/SAAScheduleExtension/activationDateTime	saaSchedActivationTime_164a	This element contains the dates and UTC times of an activation period.	aixm:TextNameType	No	**"\d{6}"** Date/time format *ddhhmm*, where: *dd*: day of month, *hh*: UTC hour, *mm*: UTC minute.	**302030**	No
AIXMBasicMessage/hasMember/Airspace/timeSlice/AirspaceTimeSlice/extension/SAAScheduleExtension/deactivationDateTime	saaSchedDeactivationTime_164b	This element contains the dates and UTC times of a deactivation period.	aixm:TextNameType	No	**"\d{6}"** Date/time format *ddhhmm*, where: *dd*: day of month, *hh*: UTC hour, *mm*: UTC minute.	**302330**	No

5.5.2.12 Altimeter Setting [HA] – Data Elements

Element Name [HA]	Element Definition	Type	Complex?	Format/Permissible Values	Example	Required?
sourceId_00e	This element specifies the source identification that includes a UTC time followed by a four-digit sequence number.	string	No	**"\d{10}"** Ten digits, of which the first 6 digits represent the UTC time (*hhmmss*) and the last four digits, represent the message sequence number in the range [0000-9999].	**2359359001**, where the first 6 digits are the UTC time (23:59:35 UTC) and the last 4 digits are sequence number of the message (9001).	Yes
sourceTime_00e1	This element specifies the time component of the previous element, sourceId_00e.	string	No	**"[0-2]\d_[0-5]\d_[0-5]\d"** Time in the format *hh_mm_ss,* where: *hh* stands for the 2-digit-hour in the range 00-23, *mm* stands for the 2-digit minutes in the range	**23_59_35** that represents 23:59:35 UTC	Yes

Element Name [HA]	Element Definition	Type	Complex?	Format/Permissible Values	Example	Required?
				00-59, and *ss* stands for the 2-digit seconds in the range 00-59.		
sourceSeqNo_00e2	This element specifies the message sequence number component of the sourceId_00e element.	string	No	**"\d{4}"** Four-digit number in the range [0000-9999].	**9001**	Yes
observedTime_35a	This element represents the time of the observed altimeter setting.	dateTime	No		**2014-10-25T17:20:00**	No
stationId_13_3	This element groups the following two elements: altimeterData_34a and altimeterReportMissing_34b.	group	Yes			Yes
altimeterData_34a	This element contains the three digits of barometric pressure.	string	No	**"\d{3}"** An altimeter setting of 000-499 implies a value of 3000-3499, and a setting of 500-999 implies a value of 2500-2999. The only possible range of settings is 2500 to 3499. NOTE: The leading digit 2 or 3 is not reported.	**929 :** the altimeter is 2929 **011** : the altimeter is 3011	Yes
altimeterReportMissing_34b	This element indicates that the altimeter data for the associated reporting station is missing. Either this element or altimeterData_34a appears in the HA message.	string	No	**"M"** The only allowed value is M.	**M**	Yes

DRAFT

5.5.2.13 Altimeter Setting [HA] – Diagram

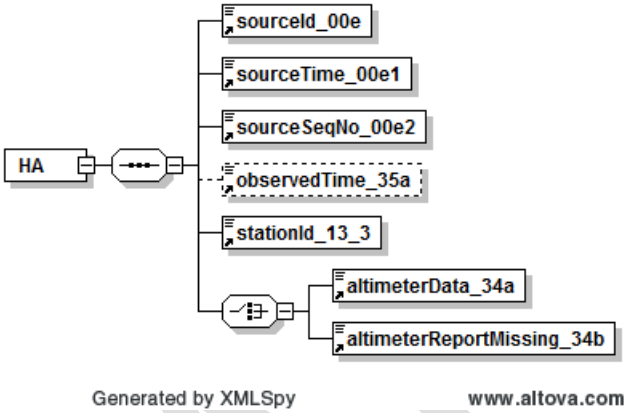

5.5.2.14 Adapted Route Status Reconstitution [DBRTRI] – Data Elements

Element Name [DBRTRI]	Element Definition	Type	Complex?	Format/Permissible Values	Example	Required?
routeStatusElements_135a	This element specifies the adapted route status elements.	string	No	**"[A-Z0-9]{2,6}"** The adapted names are Standard Instrument Departures (**SID**), Standard Terminal Arrival Routes (**STAR**), Adapted Arrival Routes (**AAR**), Adapted Departure Routes (**ADR**) and Adapted Departure and Arrival Routes (**ADAR**) that are active when initialization begins.	SD001	Yes
actionIndicator_36a	This element specifies the status of the route elements specified in the element *routeStatusElements_135a*.	string	No	**"(ON)|(OFF)"** This element has two valid values: ON or OFF.	**ON** **OFF**	Yes
seqNoOfLastRouteStatusMsg_251c	This element specifies the sequence number of the last route message was received.	int	No		**171**	Yes

Element Name [DBRTRI]	Element Definition	Type	Complex?	Format/Permissible Values	Example	Required?
timeLastRouteStatusMsgRcvd_251d	This element specifies the time the last route message was received.	dateTime	No	**dateTime**	**2014-06-20T20:17:52**	Yes

5.5.2.15 Adapted Route Status Reconstitution [DBRTRI] – Diagram

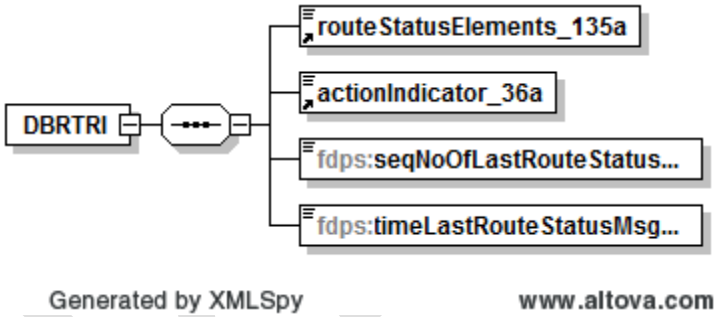

5.5.2.16 Adapted Route Status Reconstitution Message in AIXM Format [DBRTRI_AIXM] – Data Elements

The following elements of the HV message in Simple XML format are not used in the AIXM format of the message:

- seqNoOfLastRouteStatusMsg_251c
- timeLastRouteStatusMsgRcvd_251d

Element Name [DBRTRI_AIXM]	Element Name [DBRTRI]	Element Definition	Type	Complex?	Format/Permissible	Example	Required?

Element Name [DBRTRI_AIXM]	Element Name [DBRTRI]	Element Definition	Type	Complex?	Format/Permissible	Example	Required?
AIXMBasicMessage/hasMember/RouteSegment/gml:name	routeStatusElements_135a	This element contains the adapted route names. The adapted names are Standard Instrument Departures (SID), Standard Terminal Arrival Routes (STAR), Adapted Arrival Routes (AAR), Adapted Departure Routes (ADR) and Adapted Departure and Arrival Routes (ADAR) that are active when initialization begins.	gml:CodeType	Yes	**"[A-Z0-9]{2,6}"** The format is two to six alphanumeric characters.	SD001	Yes
AIXMBasicMessage/hasMember/RouteSegment/timeSlice/RouteSegmentTimeSlice[interpretation="SNAPSHOT"]/availability/RouteAvailability/status	actionIndicator_36a	This element shows the availability status of the route segment element.	aixm:CodeRouteAvailabilityType	Yes	**"(OPEN)|(CLSD)"**	**OPEN**	Yes

5.5.2.17 Altimeter Status Reconstitution [DBRTAI] – Data Elements

Element Name [DBRTAI]	Element Definition	Type	Complex?	Format/Permissible Values	Example	Required?
observedTime_35a	This element specifies the altimeter data entrance time.	dateTime	No		**2014-06-20T20:17:52**	No
stationId_13_3	This element specifies the altimeter reporting station identifier.	string	No	**"[A-Z0-9]{2,5}"**	**H5B**	Yes
altimeterData_34a	This element specifies the reported altimeter setting. Either this element or the element *altimeterReportMissing_34b* must be included in a DBRTI element.	string	No	**"\d{3}"** The format is three digits in the range 2500 – 3499. This element reports the three least-significant digits of the barometric pressure. The most significant digit can only be 2 or 3, and is devised as follows. An altimeter setting of 000-499	An altimeter setting of: The altimeter setting of: **929** implies a barometric pressure value of: 2929**.** The altimeter setting of: **011**	No

Element Name [DBRTAI]	Element Definition	Type	Complex?	Format/Permissible Values	Example	Required?
				implies a value of 3000-3499, and a setting of 500-999 implies a value of 2500-2999. The only possible range of settings is 2500 to 3499. If the character **M** is entered, the altimeter setting for the associated reporting station is missing and it is specified in the element altimeterReportMissing_34b.	implies a barometric pressure value of: 3011.	
altimeterReportMissing_34b	This element specifies that the altimeter setting for the associated reporting station is missing. Either this element or the element *altimeterReportMissing_34a* must be included in a DBRTI element.	string	No	**"M"** The only valid value is the letter M.	**M**	No
seqNoOfLastAltimeterMsg_246d	This element specifies the sequence number of the last altimeter message received.	int	No		**240**	Yes
timeLastAltimeterMsgRcvd_246e	This element specifies the time of the last altimeter message received.	dateTime	No	**dateTime**	**2014-06-20T20:17:52**	Yes

DRAFT

5.5.2.18 Altimeter Status Reconstitution [DBRTAI] – Diagram

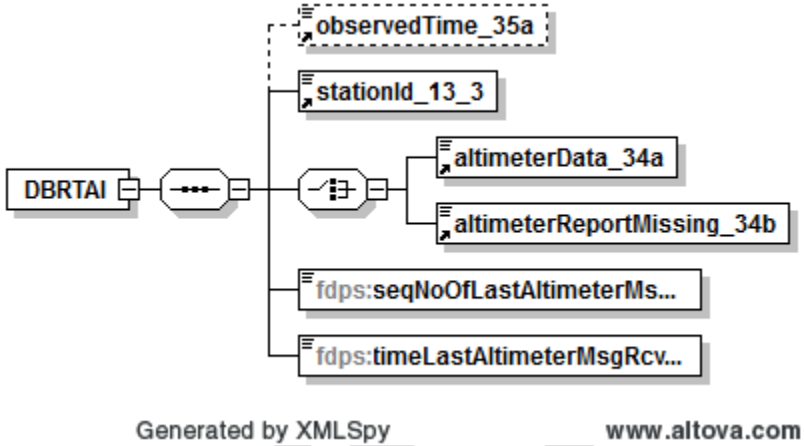

5.5.2.19 Sector Assignment Reconstitution [DBRTSI] – Data Elements

Element Name [DBRTSI]	Element Definition	Type	Complex?	Format/Permissible Values	Example	Required?
sector_29a	This element specifies the sector assignment.	string	No	**"\d{2}"**	22	Yes
noFAV_29c	When this element is present in the message, it indicates that there is no FAV assignment for this sector. Either this element or the element FAVAssignments has to be present in a message, but not both.	string	No	**"-"** Only one valid value, "-"(a dash).	-	No
FAVAssignments	This element groups the following *FAV_29d* elements. There can be from one to 437 FAV_29d elements in each FAVAssignments element.		Yes			No

Element Name [DBRTSI]	Element Definition	Type	Complex?	Format/Permissible Values	Example	Required?
	Either this element or the element noFAV_29c has to be present in a message, but not both.					
FAV_29d	This element provides the FAV Airspace Assignment number.	string	No	**"\d{4}"** The format consists in four digits, with leading zeroes as needed.	0053 2509	No
seqNoOfLastSectorAssignmentStatusMsg_250c	This element specifies the sequence number of the last sector assignment status message received.	int	No			Yes
timeLastSectorAssignmentStatusMsgRcvd_250d	This element specifies the time of the last sector assignment status message received.	dateTime	No	**dateTime**	**2014-06-20T20:17:52**	Yes

DRAFT

5.5.2.20 Sector Assignment Reconstitution [DBRTSI] – Diagram

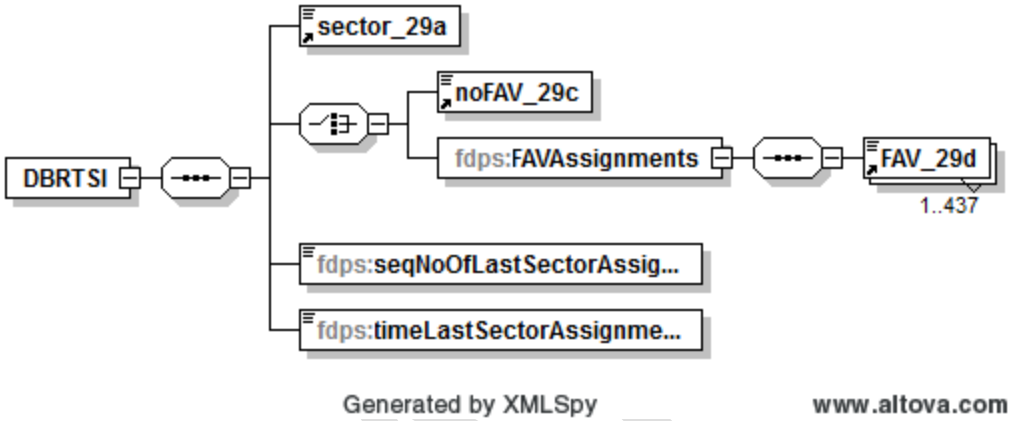

5.5.2.21 Sector Assignment Reconstitution Message in AIXM Format [DBRTSI_AIXM] – Data Elements

The following elements of the HV message in Simple XML format are not used in the AIXM format of the message:

- noFAV_29c
- FAVAssignments
- seqNoOfLastSectorAssignmentStatusMsg_250c
- timeLastSectorAssignmentStatusMsgRcvd_250d

Element Name [DBRTSI_AIXM]	Element Name [DBRTSI]	Element Definition	Type	Complex?	Format/Permissible Values	Example	Required?
AIXMBasicMessage/hasMember/Airspace/timeSlice/AirspaceTimeSlice/designator	sector_29a	A published sequence of characters allowing the identification of the airspace. This element provides the sector	aixm:CodeAirspaceDesignatorType	Yes	**"\d{2}"**	53	Yes

Element Name [DBRTSI_AIXM]	Element Name [DBRTSI]	Element Definition	Type	Complex?	Format/Permissible Values	Example	Required?
		number, for which the FAV data applies.					
AIXMBasicMessage/hasMember/Airspace/timeSlice/AirspaceTimeSlice/aixm:interpretation		Property indicating how the time slice is to be interpreted.	aixm:TextNameType	No	“SNAPSHOT”	“SNAPSHOT”	Yes
AIXMBasicMessage/hasMember/Airspace/timeSlice/AirspaceTimeSlice/type		A coded list of values that indicates a type of airspace.	aixm:CodeAirspaceType	Yes	“SECTOR”	“SECTOR”	Yes
AIXMBasicMessage/hasMember/extension/SectorAssignmentStatusExtension/FAVNumber	FAV_29d	This element provides the FAV Airspace Assignment number, or a code (a dash character) that indicates that there is no FAV assignment for this sector.	aixm:TextNameType	No	**"\d{4}|\-"** There may be up to 437 FAV numbers for each sector defined.	**7801** **“-“**	No

DRAFT

5.5.3 Operational Data Publication Service Data Elements and Diagrams

5.5.3.1 ERODP Service: targetNamespace

The targetNamespace that applies to all messages in the Operational Data Publication Service is:
us:gov:dot:faa:atm:enroute:entities:flightdata

5.5.3.2 Traffic Count Adjustment [AK] – Data Elements

Element Name [AK]	Element Definition	Type	Complex?	Format/Permissible Values	Example	Required?
sourceId_00e	This element specifies the source identification that includes a UTC time followed by a four-digit sequence number.	string	No	**"\d{10}"** Ten digits, of which the first 6 digits represent the UTC time (*hhmmss*) and the last four digits, represent the message sequence number in the range [0000-9999].	2359359001, where the first 6 digits are the UTC time (23:59:35 UTC) and the last 4 digits are sequence number of the message (9001).	Yes
sourceTime_00e1	This element specifies the time component of the previous element, sourceId_00e.	string	No	**"[0-2]\d_[0-5]\d_[0-5]\d"** Time in the format *hh_mm_ss*, where: *hh* stands for the 2-digit-hour in the range 00-23, *mm* stands for the 2-digit minutes in the range 00-59, and *ss* stands for the 2-digit seconds in the range 00-59.	23_59_35 that represents 23:59:35 UTC	Yes
sourceSeqNo_00e2	This element specifies the message sequence number component of the sourceId_00e element.	string	No	**"\d{4}"** Four-digit number in the range [0000-9999].	9001	Yes

Element Name [AK]	Element Definition	Type	Complex?	Format/Permissible Values	Example	Required?
flightId_02a	Aircraft ID, or flight ID (also called Call Sign).	string	No	**"\+?[A-Z][A-Z0-9]{1,6}"** One uppercase alphabetic character followed by one to six alphanumeric characters.	AAL20	Yes
computerId_02d	ERAM Computer Identification (Computer ID).	string	No	**"([0-9][A-HJ-NP-Z0-9]{2})|** **([0-9]{2}[A-HJ-NP-Z0-9])"** The element includes a digit, followed by two alphanumeric characters with the exception of the letters **I** and **O**, as specified by the pattern above.	020	Yes
sspId_167a	Site Specific Plan Identifier. It is assigned by IFPA to uniquely identify a flight plan in each ERAM facility.	string	No	**"\d{1,4}"** One to four digits.	24	No
trafficCountAdjustment_337a	This element provides the traffic count adjustment data for the AK message.	string	No	**"[A-Z]{4}[+-]\d{3}"** where the first four characters must be one of the following subcategory contractions: ACDD Air Carrier Domestic Departures ATDD Air Taxi Domestic Departures GADD General Aviation Domestic Departures MIDD Military Domestic Departures ACDO Air Carrier Domestic Overs ATDO Air Taxi Domestic Overs GADO General Aviation Domestic Overs MIDO Military Domestic Overs ACOD Air Carrier Oceanic Departures ATOD Air Taxi Oceanic Departures GAOD General Aviation Oceanic Departures MIOD Military Oceanic Departures ACOO Air Carrier Oceanic Overs ATOO Air Taxi Oceanic Overs	ACDD+001 Add one air carrier domestic departures	Yes

DRAFT

Element Name [AK]	Element Definition	Type	Complex?	Format/Permissible Values	Example	Required?
				GAOO General Aviation Oceanic Overs MIOO Military Oceanic Overs VFRC VFR Traffic Count The "+/-" character specifies either incrementation (plus) or decrementation (minus) of the current count. The last three digits specify the value to be applied, in the range 001-999. This element can be included in a message from one to eight times.		
enteringFacilityId_332a	This element specifies the facility identifier. Each ERAM facility has a unique one letter identifier.	string	No	**"[A-Z]"** A single letter identifying the entering facility.	F is the facility identifier for the Ft. Worth ERAM. W is the facility identifier for the Washington ERAM.	Yes
positionType_331a	This element specifies the type of the entering position.	string	No	**"[R|D|A|S]"** The position type is specified using a single letter as follows: R – R-position console D – D-position console A – A-position console S – AT Specialist	R D A S	Yes
sectorNumber_327a	This element specifies the sector number. It is used when the element positionType_331a specifies one of the letters R, D, or A. Otherwise, the element enteringPosition_330a is used.	string	No	**"\d{2}"** Either this element or enteringPosition_330a can be included in the AK element, but not both.	50	Yes, if elem. enteringPosition_330a is not included in the msg.
enteringPosition_330a	This element contains the position number identifying the entering position. It is used when the element	string	No	**"[A-Z][1-9]"** The position number must begin with a letter, followed by a one digit identifier	G2	Yes, if elem. sectorNumber_327a is not included

DRAFT

Element Name [AK]	Element Definition	Type	Complex?	Format/Permissible Values	Example	Required?
	positionType_331a contains the letter S.			in the range 1 to 9. Either this element or sectorNumber_327a can be included in the AK element, but not both.		in the msg.

5.5.3.3 Traffic Count Adjustment [AK] - Diagram

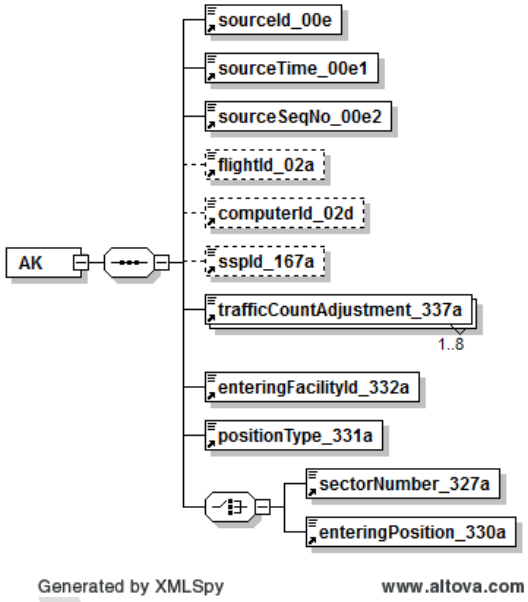

5.5.3.4 Instrument Approach Count Adjustment [AC] – Data Elements

Element Name [AC]	Element Definition	Type	Complex?	Format/Permissible Values	Example	Required?

Element Name [AC]	Element Definition	Type	Complex?	Format/Permissible Values	Example	Required?
sourceId_00e	This element specifies the source identification that includes a UTC time followed by a four-digit sequence number.	string	No	**"\d{10}"** Ten digits, of which the first 6 digits represent the UTC time (*hhmmss*) and the last four digits, represent the message sequence number in the range [0000-9999].	**2359359001** where the first 6 digits are the UTC time (23:59:35 UTC) and the last 4 digits are the sequence number of the message (9001).	Yes
sourceTime_00e1	This element specifies the time component of the previous element, sourceId_00e.	string	No	**"[0-2]\d_[0-5]\d_[0-5]\d"** Time in the format *hh_mm_ss,* where: *hh* stands for the 2-digit-hour in the range 00-23, *mm* stands for the 2-digit minutes in the range 00-59, and *ss* stands for the 2-digit seconds in the range 00-59.	**23_59_35** that represents 23:59:35 UTC	Yes
sourceSeqNo_00e2	This element specifies the message sequence number component of the sourceId_00e element.	string	No	**"\d{4}"** Four-digit number in the range [0000-9999].	**9001**	Yes
flightId_02a	Aircraft ID, or flight ID (also called Call Sign).	string	No	**"\+?[A-Z][A-Z0-9]{1,6}"** One uppercase alphabetic character followed by one to six alphanumeric characters.	**AAL20**	Yes
computerId_02d	ERAM Computer Identification (Computer ID).	string	No	**"([0-9][A-HJ-NP-Z0-9]{2})| ([0-9]{2}[A-HJ-NP-Z0-9])"** The element includes a digit, followed by two alphanumeric characters with the exception of the letters **I** and **O**, as specified in the pattern above.	**020**	Yes
sspId_167a	Site Specific Plan Identifier. It is assigned by IFPA to uniquely identify a flight plan in each ERAM facility.	string	No	**"\d{1,4}"** One to four digits.	**24**	No

DRAFT

Element Name [AC]	Element Definition	Type	Complex?	Format/Permissible Values	Example	Required?
stationId_13_3	This element specifies a reporting airport.	string	No	**"[A-Z0-9]{2,5}"** Two to five alphanumeric characters.	**AUS**	Yes
actionIndicator_36h	This element shows the status of the instrument approach count.	string	No	**"(AUTO)|(ON)|(OFF)"** It can have one of the following values: **AUTO** — count instrument approaches based on stored weather **ON** — count instrument approaches regardless of stored weather **OFF** — do not count instrument approaches Either this field or the following field, *instrumentApproachCountAdjustment_338a*, can appear in element AC, but not both.	**AUTO** **ON** **OFF**	No
instrumentApproachCountAdjustment_338a	This element specifies the Instrument Approach Count Adjustment Data used in the AC element. It specifies the data subcategory, the adjustment type (increment or decrement), and the value to use in the adjustment of that subcategory.	string	No	**"((AC)|(AT)|(GA)|(MI))[+-]\d{2}"** The first two letters represent the alphabetic subcategory contraction as follows: **AC** (air carrier) **AT** (air taxi) **GA** (general aviation) **MI** (military) The following character, + /-, specifies the adjustment type: increment or decrement. The last two digits specify the value to be applied to the alphabetic subcategory in the range 01 - 99. There can be zero to four occurrences of this element in	**AC+03** In this example an air carrier count is incremented by 3.	No

DRAFT

Element Name [AC]	Element Definition	Type	Complex?	Format/Permissible Values	Example	Required?
				the AC element. Either this element or *actionIndicator_36h* can appear in element AC, but not both.		
enteringFacilityId_332a	This element specifies the facility identifier. Each ERAM facility has a unique one letter identifier.	string	No	**"[A-Z]"** A single letter identifying the entering facility.	**F** is the facility identifier for the Ft. Worth ERAM. **W** is the facility identifier for the Washington ERAM.	Yes
positionType_331a	This element specifies the type of the entering position.	string	No	**"[R|D|A|S]"** The position type is specified using a single letter as follows: R – R-position console D – D-position console A – A-position console **S** – AT Specialist	**R** **D** **A** **S**	Yes
sectorNumber_327a	This element specifies the sector number. It is used when the element *positionType_331a* specifies one of the letters R, D, or A. Otherwise, the element *enteringPosition_330a* is used.	string	No	**"\d{2}"** Either this element or *enteringPosition_330a* can be included in the AC element, but not both.	**50**	Yes, if elem. *enteringPosition_330a* is not included in the msg.
enteringPosition_330a	This element contains the position number identifying the entering position. It is used when the element *positionType_331a* contains the letter **S.**	string	No	**"[A-Z][1-9]"** The position number must begin with a letter, followed by a one-digit identifier in the range 1 to 9. Either this element or *sectorNumber_327a* can be included in the AC element, but not both.	**G2**	Yes, if elem. *sectorNumber_327a* is not included in the msg.

DRAFT

5.5.3.5 Instrument Approach Count Adjustment [AC] - Diagram

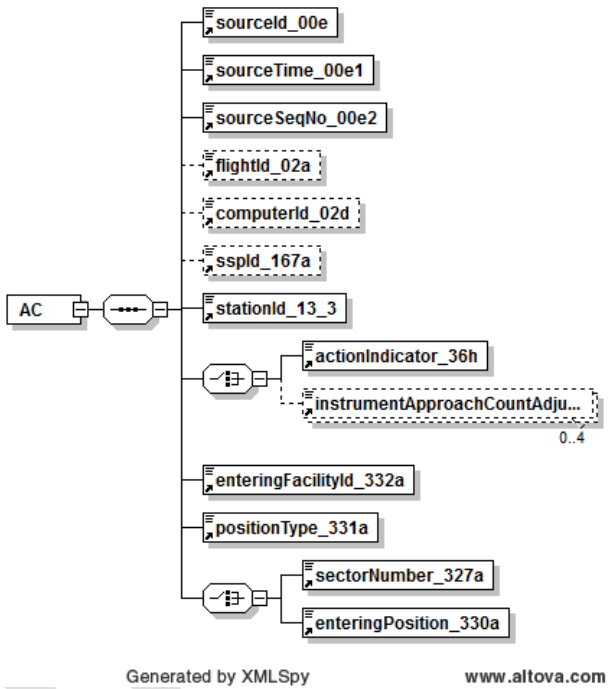

5.5.3.6 Sign In Sign Out [SY] – Data Elements

Element Name [SY]	Element Definition	Type	Complex?	Format/Permissible Values	Example	Required?
sourceId_00e	This element specifies the source identification that includes a UTC time followed by a four-digit sequence number.	string	No	**"\d{10}"** Ten digits, of which the first 6 digits represent the UTC time (*hhmmss*) and the last four	**2359359001** , where the first 6 digits are the UTC time	Yes

Element Name [SY]	Element Definition	Type	Complex?	Format/Permissible Values	Example	Required?
				digits, represent the message sequence number in the range [0000-9999].	(23:59:35 UTC) and the last 4 digits represent the sequence number of the message (9001).	
sourceTime_00e1	This element specifies the time component of the previous element, sourceId_00e.	string	No	**"[0-2]\d_[0-5]\d_[0-5]\d"** Time in the format *hh_mm_ss,* where: *hh* stands for the 2-digit-hour in the range 00-23, *mm* stands for the 2-digit minutes in the range 00-59, and *ss* stands for the 2-digit seconds in the range 00-59.	**23_59_35** that represents 23:59:35 UTC	Yes
sourceSeqNo_00e2	This element specifies the sequence number component of the sourceId_00e element.	string	No	**"\d{4}"** Four-digit number in the range [0000-9999].	**9001**	Yes
controllerInitials_317a	This element specifies the controller initials for a sign in/sign out action.	string	No	**"[A-Z]{2}[A-Z0-9]?"** The format is two letters followed by an optional alphanumeric character.	**PD**	Yes
nonOperationalUserInitials_318a	This element specifies the non-operational user initials for a sign in/sign out action.	string	No	**"[A-Z]{2}[A-Z0-9]?"** The format is two letters followed by an optional alphanumeric character.	**LB**	No
crewNumber_319a	This element specifies the crew number associated with the user(s) at the time of a sign in or sign out action.	string	No	**"\d"** The format is a single digit.	**7**	No
areaNumber_320a	This element specifies the area number in a sign in or sign out action. The area number is an adapted value correlating a defined area to a sector, i.e., the target position for a sign in/sign out action.	string	No	**"\d"** The format is a single digit.	**5**	No

DRAFT

Element Name [SY]	Element Definition	Type	Complex?	Format/Permissible Values	Example	Required?
inOutIndicator_321a	This element specifies the type of message in a sign in or sign out action. The type can be either a sign in: I or sign out: O.	string	No	**"[IO]"** The letter **I** or **O**.	**I** **O**	Yes
role_322a	This element specifies field contains the task of the user in a sign in or sign out action, either an operational role: O or a training role: T.	string	No	**"[OT]"** Either the letter O or T.	**O** **T**	Yes
tracker_323a	This element specifies the responsibilities of the user in a sign in or sign out action, either handoff controller (Y) or not handoff controller (N).	string	No	**"[YN]"** Either the letter Y or N.	**Y** **N**	Yes
signInTime_324a	This element specifies the date and time for a sign in action. Current system time is always used for a sign in action except for those initiated at the AT Specialist Position, which may optionally include date and time as part of the sign in message. When both element *signInTime_324a* and *signOutTime_325a* are included in a sign in/sign out action, the user is signed in and automatically signed out at the same position.	dateTime	No		**2014-06-20T20:17:52**	No
signOutTime_325a	This field contains the date and time for a sign out action. Current system time is always used for a sign out action except for those initiated at the AT Specialist Position, which may optionally include date and time as part of the sign out message.	dateTime	No	**dateTime**	**2014-06-20T20:17:52**	No

DRAFT

Element Name [SY]	Element Definition	Type	Complex?	Format/Permissible Values	Example	Required?
localUTCOffset_329a	This element specifies the local UTC time offset, i.e. the number of hours, plus or minus, that local midnight occurs relative to UTC midnight.	string	No	**"[+-]\d{2}"** The format consists of a plus (+) or minus (-) sign followed by two digits.	**-06**	Yes
position_326a	This element specifies the target position, i.e., the position where a sign in/sign out action occurs. The position that a user is attempting to sign into is defined as the target position, and is determined by either the sector position that the command is entered from (R-, D-, or A-positions), or the sector position contained in a SISO message entered at the AT Specialist position.	string	No	**"[RDAN]"** The format is one letter, and the allowed values are: R – R-position console D – D-position console A – A-position console N – Pseudo position	**R** **D** **A** **N**	Yes
sectorNumber_327a	This element specifies a two-digit sector number. When used in a sign in/sign out action designating an "N" position, the sector number is not checked to determine if it is adapted in the center.	string	No	**"\d{2}"** Either this element or *enteringPosition_330a* can be included in the AC element, but not both.	**50**	Yes
recordingReason_328a	This element specifies the reason for recording a sign-in/sign-out action. The reason for the action must be one of the following: 0 - Sign In/Sign Out entered from a Sector Position 1 - Sign In/Sign Out (less than two time fields) entered from an AT Specialist Position 2 - Sign Out due to a resectorization	string	No	**"0-5"** The format consists of one digit, in the range 0 - 5.	**0** **1** **2** **3** **4** **5**	No

DRAFT

Element Name [SY]	Element Definition	Type	Complex?	Format/Permissible Values	Example	Required?
	3 - Forced Sign Out due to another Sign In 4 - Automatically Signed Back In 5 - Sign In/Sign Out due to a Sign In with two time fields from an AT Specialist Position.					

DRAFT

5.5.3.7 Sign In Sign Out [SY] - Diagram

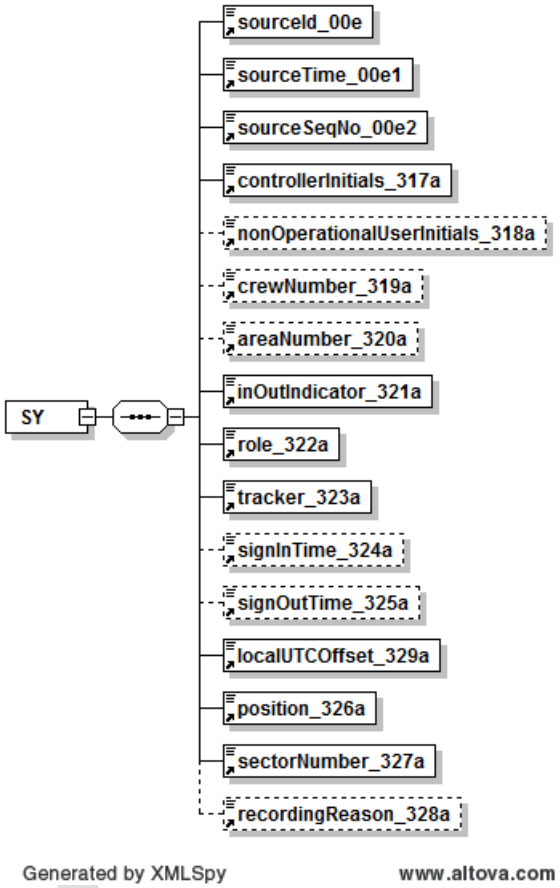

5.5.3.8 Beacon code Utilization [UB] – Data Elements

Element Name [UB]	Element Definition	Type	Complex?	Format/Permissible Values	Example	Required?
sourceId_00e	This element specifies the source identification that includes a UTC time followed by a four-digit sequence number.	string	No	**"\d{10}"** Ten digits, of which the first 6 digits represent the UTC time (*hhmmss*) and the last four digits, represent the message sequence number in the range [0000-9999].	**2359359001** where the first 6 digits are the UTC time (23:59:35 UTC) and the last 4 digits are the sequence number of the message (9001).	Yes
sourceTime_00e1	This element specifies the time component of the previous element, sourceId_00e.	string	No	**"[0-2]\d_[0-5]\d_[0-5]\d"** Time in the format *hh_mm_ss,* where: *hh* stands for the 2-digit-hour in the range 00-23, *mm* stands for the 2-digit minutes in the range 00-59, and *ss* stands for the 2-digit seconds in the range 00-59.	**23_59_35** that represents 23:59:35 UTC	Yes
sourceSeqNo_00e2	This element specifies the message sequence number component of the sourceId_00e element.	string	No	**"\d{4}"** Four-digit number in the range [0000-9999].	**9001**	Yes
internalPrimarySecondaryAdaptedCodes_47a	This element specifies the peak number of internal primary and secondary codes and the total number of adapted codes.	string	No	**"\d{4}/\d{4}"** The format is a four-digit number followed by a virgule, followed by another four-digit number.	**0020/0417**	Yes
internalTertiaryAdaptedCodes_47b	This element specifies the peak number of internal tertiary codes and the total number of adapted codes.	string	No	**"\d{4}/\d{4}"** The format is a four-digit number followed by a virgule, followed by another four-digit number.	**0000/0000**	Yes
externalPrimarySecondaryAdaptedCodes_47c	This element specifies the	string	No	**"\d{4}/\d{4}"**	**0020/0417**	Yes

DRAFT

Element Name [UB]	Element Definition	Type	Complex?	Format/Permissible Values	Example	Required?
	peak number of external primary and secondary codes and the total number of adapted codes.			The format is a four-digit number followed by a virgule, followed by another four-digit number.		
externalTertiaryAdaptedCodes_47d	This element specifies the peak number of external tertiary codes and the total number of adapted codes.	string	No	**"\d{4}/\d{4}"** The format is a four-digit number followed by a virgule, followed by another four-digit number.	**0000/0000**	Yes
codeReassignments_47e	This element specifies the number of code reassignments since midnight.	string	No	**"\d{4}"** The format is a four-digit number in the range of 0000 – 9999.	**0020**	Yes

5.5.3.9 Beacon code Utilization [UB] - Diagram

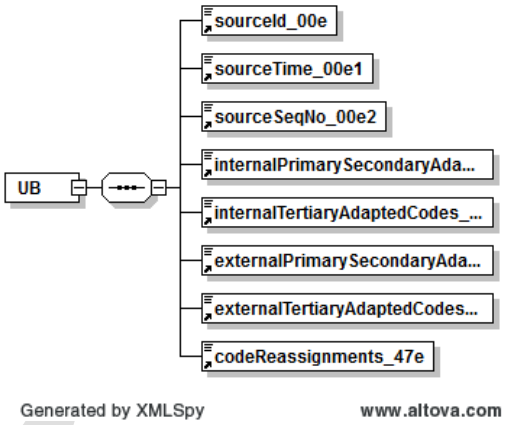

DRAFT

5.5.3.10 Geographic Beacon Code Utilization [UG] – Data Elements

Element Name [UG]	Element Definition	Type	Complex?	Format/Permissible Values	Example	Required?
sourceId_00e	This element specifies the source identification that includes a UTC time followed by a four-digit sequence number.	string	No	**"\d{10}"** Ten digits, of which the first 6 digits represent the UTC time (*hhmmss*) and the last four digits, represent the message sequence number in the range [0000-9999].	**2359359001** where the first 6 digits are the UTC time (23:59:35 UTC) and the last 4 digits are the sequence number of the message (9001).	Yes
sourceTime_00e1	This element specifies the time component of the previous element, sourceId_00e.	string	No	**"[0-2]\d_[0-5]\d_[0-5]\d"** Time in the format *hh_mm_ss,* where: *hh* stands for the 2-digit-hour in the range 00-23, *mm* stands for the 2-digit minutes in the range 00-59, and *ss* stands for the 2-digit seconds in the range 00-59.	**23_59_35** that represents 23:59:35 UTC	Yes
sourceSeqNo_00e2	This element specifies the message sequence number component of the sourceId_00e element.	string	No	**"\d{4}"** Four-digit number in the range [0000-9999].	**9001**	Yes
elapsedTime_50a	This element specifies the elapsed time since the last report in minutes.	string	No	**"\d{4}"** Four-digit number in the range [0000-1440].	**1220**	Yes
region	This element groups the following three elements: *destinationRegionId_50b*, *geoPrimaryAdaptedCodes_50c*, and *geoSecondaryAdaptedCodes_50d*.	group	Yes	This element may be included between one and fifty times in an UG element.		Yes
destinationRegionId_50b	This element specifies the destination region identifier.	string	No	**"\d{2}"** Two digit string.		Yes
geoPrimaryAdaptedCodes_50c	This element specifies the peak number of geographic primary beacon codes and the total number	string	No	**"\d{4}/\d{4}"** The format is a four-digit number	0045/0315	Yes

DRAFT

Element Name [UG]	Element Definition	Type	Complex?	Format/Permissible Values	Example	Required?
	of adapted primary codes for the region. Its format is a four-digit number flowed by a virgule, followed by another four-digit number.			followed by a virgule, followed by another four-digit number.		
geoSecondaryAdaptedCodes_50d	This element specifies the peak number of geographic secondary beacon codes and the total number of adapted secondary codes for the region.	string	No	**"\d{4}/\d{4}"** The format is a four-digit number followed by a virgule, followed by another four-digit number.	0045/0315	Yes

5.5.3.11 Geographic Beacon Code Utilization [UG] - Diagram

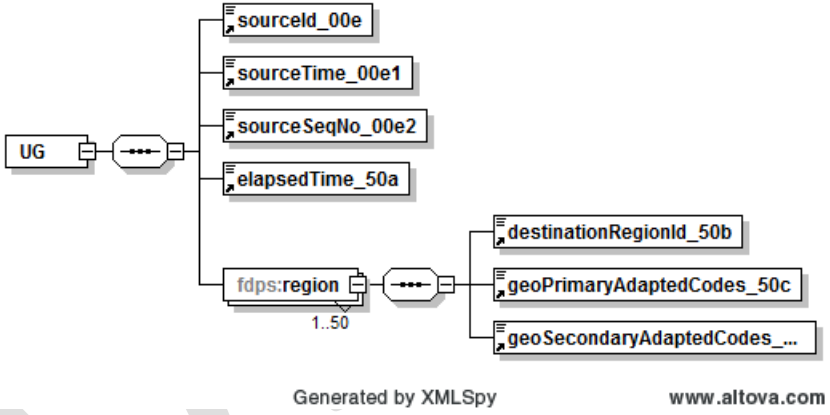

5.5.4 General Information Publication Service Data Elements and Diagram

5.5.4.1 ERGMP Service: targetNamespace

The targetNamespace that applies to all messages in the General Information Publication Service is:
us:gov:dot:faa:atm:enroute:entities:flightdata

5.5.4.2 General Information [GH] – Data Elements

Element Name [GH]	Element Definition	Type	Complex?	Format/Permissible Values	Example	Required?
sourceId_00e	This element specifies the source identification that includes a UTC time followed by a four-digit sequence number.	string	No	**"\d{10}"** Ten digits, of which the first 6 digits represent the UTC time (*hhmmss*) and the last four digits, represent the message sequence number in the range [0000-9999].	**2359359001** where the first 6 digits are the UTC time (23:59:35 UTC) and the last 4 digits are the sequence number of the message (9001).	Yes
sourceTime_00e1	This element specifies the time component of the previous element, sourceId_00e.	string	No	**"[0-2]\d_[0-5]\d_[0-5]\d"** Time in the format *hh_mm_ss,* where: *hh* stands for the 2-digit-hour in the range 00-23, *mm* stands for the 2-digit minutes in the range 00-59, and *ss* stands for the 2-digit seconds in the range 00-59.	**23_59_35** that represents 23:59:35 UTC	Yes
sourceSeqNo_00e2	This element specifies the message sequence number component of the sourceId_00e element.	string	No	**"\d{4}"** Four-digit number in the range [0000-9999].	**9001**	Yes
remarks_11c	This element specifies the text message that is sent to a specified position. The length is limited by the input device (up	string	No	String of one to 400 characters. It has an attribute called *remarktype* with the possible values of interfacility or intrafacility.		Yes

Element Name [GH]	Element Definition	Type	Complex?	Format/Permissible Values	Example	Required?
	to 300 characters). The General Information (GH) element provides general information/free text remarks to ATM client applications. ERAM sends a GH message to a specific ATM client application or to all ATM client applications via ATM IPOP, as indicated by destination address routing. The Center-TRACON Automation System (CTAS) can input a GH message to a position in the ERAM facility.					

5.5.4.3 General Information [GH] - Diagram

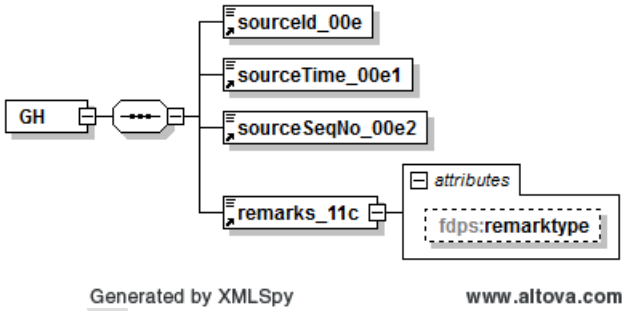

5.5.4.4 Interim Altitude Status Information [HE] – Data Elements

Element Name [HE]	Element Definition	Type	Complex?	Format/Permissible Values	Example	Required?

Element Name [HE]	Element Definition	Type	Complex?	Format/Permissible Values	Example	Required?
sourceId_00e	This element specifies the source identification that includes a UTC time followed by a four-digit sequence number.	string	No	**"\d{10}"** Ten digits, of which the first 6 digits represent the UTC time (*hhmmss*) and the last four digits, represent the message sequence number in the range [0000-9999].	**2359359001** , where the first 6 digits are the UTC time (23:59:35 UTC) and the last 4 digits are the sequence number of the message (9001).	Yes
sourceTime_00e1	This element specifies the time component of the previous element, sourceId_00e.	string	No	**"[0-2]\d_[0-5]\d_[0-5]\d"** Time in the format *hh_mm_ss,* where: *hh* stands for the 2-digit-hour in the range 00-23, *mm* stands for the 2-digit minutes in the range 00-59, and *ss* stands for the 2-digit seconds in the range 00-59.	**23_59_35** that represents 23:59:35 UTC	Yes
sourceSeqNo_00e2	This element specifies the message sequence number component of the sourceId_00e element.	string	No	**"\d{4}"** Four-digit number in the range [0000-9999].	**9001**	Yes
flightId_02a	Aircraft ID, or flight ID (also called Call Sign).	string	No	**"\+?[A-Z][A-Z0-9]{1,6}"** One uppercase alphabetic character followed by one to six alphanumeric characters.	**AAL20**	Yes
computerId_02d	ERAM Computer Identification (Computer ID).	string	No	**"([0-9][A-HJ-NP-Z0-9]{2})| ([0-9]{2}[A-HJ-NP-Z0-9])"** The element includes a digit, followed by two alphanumeric characters with the exception of the letters **I** and **O.**	**020**	Yes
sspId_167a	Site Specific Plan Identifier. It is assigned by IFPA to uniquely identify a flight plan in each ERAM facility.	string	No	**"\d{1,4}"** One to four-digits.	**24**	No
interimAlt_76b	The aircraft altitude in hundreds of	string	No	**"\d{1,3}"**	**240**	Yes

DRAFT

Element Name [HE]	Element Definition	Type	Complex?	Format/Permissible Values	Example	Required?
	feet.			One to three-digits.		

5.5.4.5 Interim Altitude Status Information [HE] – Diagram

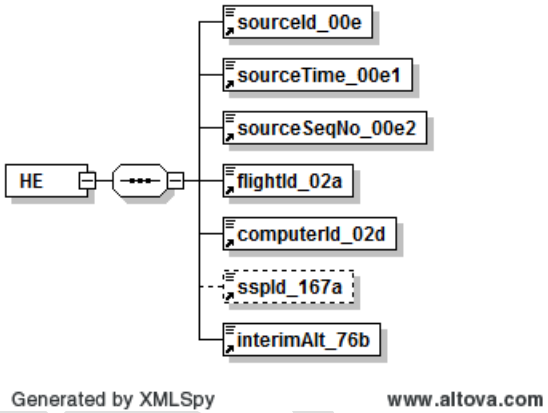

5.5.4.6 Hold Status Information [HO] – Data elements

Element Name [HO]	Element Definition	Type	Complex?	Format/Permissible Values	Example	Required?
sourceId_00e	This element specifies the source identification that includes a UTC time followed by a four-digit sequence number.	string	No	**"\d{10}"** Ten digits, of which the first 6 digits represent the UTC time (*hhmmss*) and the last four digits, represent the message sequence number in the range [0000-9999].	**2359359001** , where the first 6 digits are the UTC time (23:59:35 UTC) and the last 4 digits are the	Yes

Element Name [HO]	Element Definition	Type	Complex?	Format/Permissible Values	Example	Required?
					sequence number of the message (9001).	
sourceTime_00e1	This element specifies the time component of the previous element, sourceId_00e.	string	No	**"[0-2]\d_[0-5]\d_[0-5]\d"** Time in the format *hh_mm_ss,* where: *hh* stands for the 2-digit-hour in the range 00-23, *mm* stands for the 2-digit minutes in the range 00-59, and *ss* stands for the 2-digit seconds in the range 00-59.	**23_59_35** that represents 23:59:35 UTC	Yes
sourceSeqNo_00e2	This element specifies the message sequence number component of the sourceId_00e element.	string	No	**"\d{4}"** Four-digit number in the range [0000-9999].	**9001**	Yes
flightId_02a	Aircraft ID, or flight ID (also called Call Sign).	string	No	**"\+?[A-Z][A-Z0-9]{1,6}"** One uppercase alphabetic character followed by one to six alphanumeric characters.	**AAL20**	Yes
computerId_02d	ERAM Computer Identification (Computer ID).	string	No	**"([0-9][A-HJ-NP-Z0-9]{2})| ([0-9]{2}[A-HJ-NP-Z0-9])"** The element includes a digit, followed by two alphanumeric characters with the exception of the letters **I** and **O.**	**020**	Yes
sspId_167a	Site Specific Plan Identifier. It is assigned by IFPA to uniquely identify a flight plan in each ERAM facility.	string	No	**"\d{1,4}"** One to four-digits.	**24**	No
holdDataFix_21a	Hold Fix. Specifies the position location for the flight to Hold along the filed route of the flight.	string	No	**"(([A-Z0-9]{2,5}) | ([A-Z0-9]{2,5}\d{6}) | (\d{4}[A-Z]?/\d{4,5}[A-Z]?))"**	**TXK** **OKC270015** **3500N/94000W**	Yes
holdDataTime_21d	Hold Time. Specifies the time the flight can expect further clearance at the hold fix specified in element holdDataFix_21a.	dateTime	No		**2014-10-30T17:20:00**	No

DRAFT

5.5.4.7 Hold Status Information [HO] – Diagram

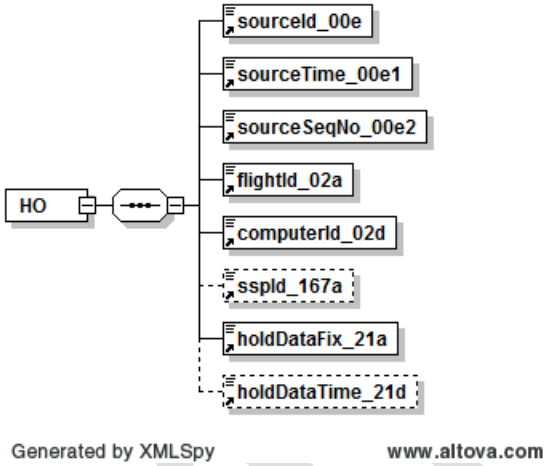

5.5.4.8 ERAM Status Information [HS] – Data Elements

Element Name [HO]	Element Definition	Type	Complex?	Format/Permissible Values	Example	Required?
sourceId_00e	This element specifies the source identification that includes a UTC time followed by a four-digit sequence number.	string	No	**"\d{10}"** Ten digits, of which the first 6 digits represent the UTC time (*hhmmss*) and the last four digits, represent the message sequence number in the range [0000-9999].	**2359359001** , where the first 6 digits are the UTC time (23:59:35 UTC) and the last 4 digits are the sequence number of the message (9001).	Yes

DRAFT

Element Name [HO]	Element Definition	Type	Complex?	Format/Permissible Values	Example	Required?
sourceTime_00e1	This element specifies the time component of the previous element, sourceId_00e.	string	No	**"[0-2]\d_[0-5]\d_[0-5]\d"** Time in the format *hh_mm_ss,* where: *hh* stands for the 2-digit-hour in the range 00-23, *mm* stands for the 2-digit minutes in the range 00-59, and *ss* stands for the 2-digit seconds in the range 00-59.	**23_59_35** that represents 23:59:35 UTC	Yes
sourceSeqNo_00e2	This element specifies the message sequence number component of the sourceId_00e element.	string	No	**"\d{4}"** Four-digit number in the range [0000-9999].	**9001**	Yes
operationalNativeStatus_140a	Status Change Indicator ON2 operational.	string	No	**"[A-Z]{2}[A-Z0-9]"** The permissible values are: • INA = inactive • ON2 = operational using live inputs	**INA** **ON2**	Yes
plannedShutdownStatus_140b	Shutdown Status Indicator	string	No	**"[A-Z]{3}"** The permissible values are: • PSE = planned shutdown entered; it requires the elements shutdownStartTime_32a and shutdownTerminateTime_33a • PSA = planned shutdown activated • PSN = planned shutdown not active	**PSA** **PSN** **PSE**	Yes
switchOverStatus_140c	Status Change Indicator Channel Switch	string	No	**"[A-Z]{3}"** The permissible values are: • SSW = channel switch • SSO = PAS/SAS switch • SSN = channel switch or	**SSW** **SSO** **SSN**	Yes

DRAFT

Element Name [HO]	Element Definition	Type	Complex?	Format/Permissible Values	Example	Required?
				PAS/SAS switch not in effect		
meteringStatus_140d	TMAD Status Change Indicator.	string	No	**"[A-Z]{3}"** The permissible values are: • DOF = parameter TMAD is OFF • DON = parameter TMAD is ON	**DOF** **DON**	Yes
RVSMStatus_140e	RVSM Status Change Indicator	string	No	**"[A-Z]{2}"** The permissible values are: ON = parameter RVSM is ON OFF = parameter RVSM is OFF	**ON** **OFF**	Yes
IREEStatus_140f	IREE Status Change Indicator	string	No	**"[A-Z]{2}"** The permissible values are: • ON = parameter IREE is ON • OFF = parameter IREE is OFF	**ON** **OFF**	No
IITSStatus_140g	IITS Status Change Indicator	string	No	**"[A-Z]{2}"** The permissible values are: • ON = parameter IITS is ON • OFF = parameter IITS is OFF	**ON** **OFF**	No
shutdownStartTime_32a	Shutdown Start Time	xs:time	No	Needed only when plannedShutdownStatus_140b = PSE.	**09:30:00**	No
shutdownTerminateTime_33a	Shutdown Terminate Time	xs:time	No	Needed only when plannedShutdownStatus_140b = PSE.	**10:30:00**	No
systemTypeId_168a	System Type Identification	string	No	**"[A-Z]{4}"** Permissible value is "ERAM"	**ERAM**	No
CMSVersionNo_169a	CMS version number that will contain the third through sixth alphanumeric characters of the ERAM national release name that is in use at the local ERAM facility.	string	No	**"[0-9]{4}"** Four digits.	**0012**	No

DRAFT

5.5.4.9 ERAM Status Information [HS] – Diagram

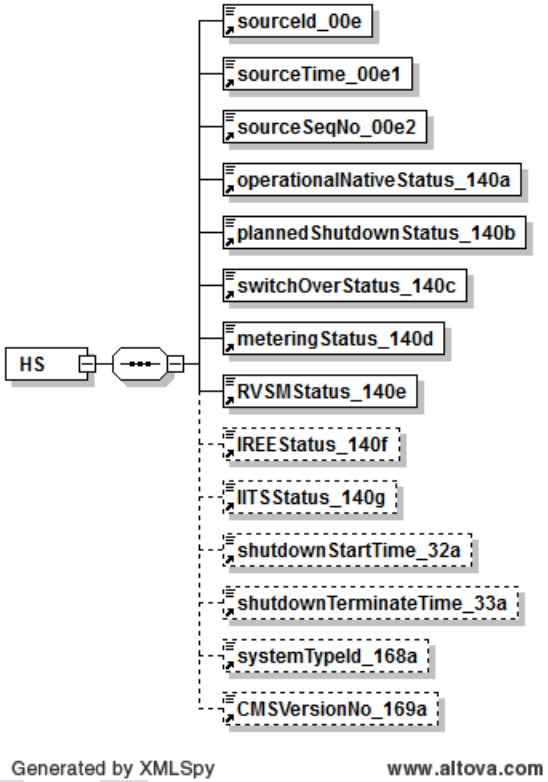

5.5.4.10 Unsuccessful Transmission Information [UI] – Data Elements

Element Name [HO]	Element Definition	Type	Complex?	Format/Permissible Values	Example	Required?
sourceId_00e	This element specifies the source identification that includes a UTC time followed by a four-digit sequence number.	string	No	**"\d{10}"** Ten digits, of which the first 6 digits represent the UTC time (*hhmmss*) and the last four digits, represent the	**2359359001** where the first 6 digits are the UTC time	Yes

Element Name [HO]	Element Definition	Type	Complex?	Format/Permissible Values	Example	Required?
				message sequence number in the range [0000-9999].	(23:59:35 UTC) and the last 4 digits are the sequence number of the message (9001).	
sourceTime_00e1	This element specifies the time component of the previous element, sourceId_00e.	string	No	**"[0-2]\d_[0-5]\d_[0-5]\d"** Time in the format *hh_mm_ss,* where: *hh* stands for the 2-digit-hour in the range 00-23, *mm* stands for the 2-digit minutes in the range 00-59, and *ss* stands for the 2-digit seconds in the range 00-59.	**23_59_35** that represents 23:59:35 UTC	Yes
sourceSeqNo_00e2	This element specifies the message sequence number component of the sourceId_00e element.	string	No	**"\d{4}"** Four-digit number in the range [0000-9999].	**9001**	Yes
flightId_02a	Aircraft ID, or flight ID (also called Call Sign).	string	No	**"\+?[A-Z][A-Z0-9]{1,6}"** One uppercase alphabetic character followed by one to six alphanumeric characters.	**AAL20**	Yes
computerId_02d	ERAM Computer Identification (Computer ID).	string	No	**"([0-9][A-HJ-NP-Z0-9]{2})| ([0-9]{2}[A-HJ-NP-Z0-9])"** The element includes a digit, followed by two alphanumeric characters with the exception of the letters **I** and **O.**	**020**	No
sspId_167a	Site Specific Plan Identifier. It is assigned by IFPA to uniquely identify a flight plan in each ERAM facility.	string	No	**"\d{1,4}"** One to four-digits.	**24**	No
outputRouting_16b	Adapted coordination indicator of the facility to which transmission of flight data is unsuccessful.	string	No	3-byte long string.	**AD+**	Yes
FAV_29d	FAV Airspace assignment.	string	No	**"\d{4}"** Four digits.	**1700**	No

DRAFT

Element Name [HO]	Element Definition	Type	Complex?	Format/Permissible Values	Example	Required?

5.5.4.11 Unsuccessful Transmission Informattion [UI] - Diagram

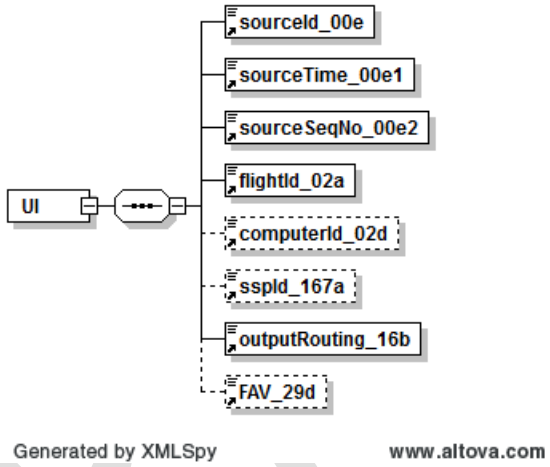

DRAFT

6. Service Implementation

The JMS provider for SFDPS is ActiveMQ deployed on NEMS infrastructure. SFDPS publishes messages to a JMS queue established at NEMS. Client consumers will connect to a topic to receive data.

6.1 Bindings

The NEMS ICD describes the bindings.

6.1.1 ActiveMQ

All SFPDS connections to NEMS are through ActiveMQ.

6.1.1.1 Data format

All data published to NEMS in SimpleXML format (reference 15). Data for flight messages that were received from the ARTCC controlling the flight are also published in FIXM format (reference 17). Data for airspace messages are also published in AIXM format (reference 17).

6.1.1.2 Message protocol

The message protocol is JMS.

6.1.1.3 Transport protocol

The transport protocol is Transmission Control Protocol (TCP).

6.2 End Points

6.2.1 End Point 1

SFDPS consumers connect to NEMS using JMS to retrieve data from their subscribed topic(s). Additional details about the NEMS JMS interface may be obtained in the NEMS ICD (reference [14]).

DRAFT